Spare parts catalogue STREETFIGHTER S

Model year 2012
U.S.A.

STREETFIGHTER

Revision n°00

Spare parts catalogue part number: 915.1290.1F

GENERAL INFORMATION

The present spare parts order exactly the right spare parts

When ordering specify:

1) the part's code number followed by its description; quantity needed;

2) the motorcycle's serial number, stamped on the steering head.

Reference to right and left apply to the vehicle in terms of its direction of move-ment.

Spare parts drawings are general and do not represent the part.

The contents of this catalogue are general and can undergo changes without prior notice.

VALIDITY

f.m.	Until V.I.N.
d.m.	From V.I.N.
f.m.m.	Up to engine number
d.m.m.	From engine number

LIST

CAL	California
CDN	Canada

Ducati Motor Holding S.p.A.
Commercial and Administation Office:
Via A. Cavalieri Ducati n. 3
40132 Bologna, Italy
Telefono 051 6413111
Fax 051 406580
Internet www.ducati.com

CATALOGUE No: 915.1.290.1F
ISSUED: 10 - 11

CATALOGUE No: 915.1.290.1F
ISSUED: 10 - 11



Paint	Code
"Rosso Anniversary DUCATI"	(PPG) 473.101
"Trasparente"	(PPG) 228.880
"Fondo 2K nero"	(PALINAL) 873.A002
"Chrome Grey"	(PALINAL) 928.F891
"Trasparente 2K"	(PALINAL) 923I1831

CATALOGUE No: 915.1.290.1F
ISSUED: 10 - 11

Contents

page		
4	001	Workshop service tools
6	001a	Workshop service tools
8	001b	Workshop service tools
10	001c	Dds (2) tester
12	002	Gearchange control
14	003	Gearbox
16	004	Clutch
18	005	Clutch-side crankcase cover
20	006	Connecting rods
22	007	Cylinders - pistons
24	008	Timing system
26	009	Filters and oil pump
28	010	Crankcase halves
30	010a	Crankcase halves
32	011	Water pump-altr-side crnkcse cover
34	012	Electric starting and ignition
36	013	Cylinder head : timing system
38	014	Vertical cylinder head
40	015	Horizontal cylinder head
42	016	Heat exchanger
44	017	Throttle body
46	018	Battery support
48	018a	Electrical system
50	019	Exhaust system
52	020	Headlight & instr. panel
54	021	Handlebar and controls
56	021a	Front forks
58	022	Frame
60	022a	Stand
62	023	Clutch control
64	024	Front brake
66	025	Rear brake
68	026	Front and rear wheels
70	026a	Rear wheel axle
72	027	Rear subframe
74	027a	Number plate holder
76	028	Rear suspension
78	028a	Swingarm
80	029	Air intake - oil breather
82	030	Radiator
84	031	Cooling system
86	032	Fuel tank
88	032a	Fuel system
90	033	Seat
92	034	Half fairing
94	035	Evaporative emissions canister
96	036	Data plate positions

CATALOGUE No: 915.1.290.1F
ISSUED: 10 - 11

DRAWING 001 Workshop service tools

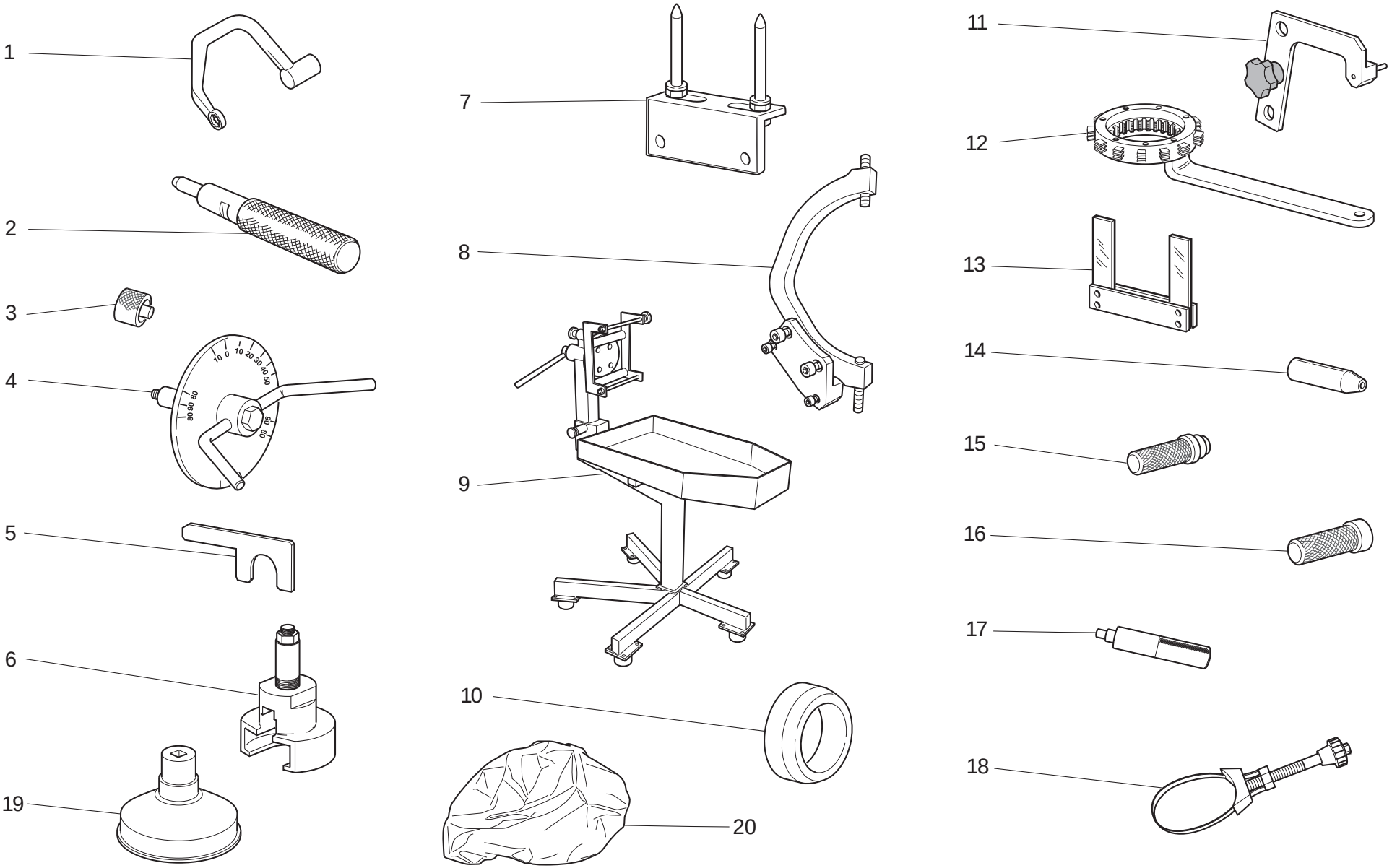

DRAWING 001 Workshop service tools

NOTES NO.	CODE NO.	DESCRIPTION	VALIDITY	Q.TY
1	88713.2676	Head nuts holder wrench		1
2	88713.2442	Tool to drive valve seal ring ø7		1
3	88765.1298	Spacer for checking lower valve shim		1
4	88765.1657	Degree wheel holder tool for ignition advance check		1
5	88713.2878	Spacer and fork feeler gauge 0,2/0,3 mm		1
6	88713.2092	Extractor for primary drive gear		1
7	88713.2103	Head mounting base		1
8	88713.3367	Flywheel Wrench		1
9	88713.1832	Bench for engine repair		1
10	88700.5665	Sleeve for installing clutch bell gear		1
11	88713.3334	Plate for positioning gear engagement fork		1
12	88713.2133	Wrench to hold cluch housing drum steady		1
13	88765.1000	Fork feeler gauge 0.1 mm		1
13	88765.1005	Fork feeler gauge 0,2 mm		1
13	88765.1006	Fork feeler gauge 0.3 mm		1
14	88700.5749	Crankcases assembling cap		1
15	88713.0869	Tool for assembling water pump front seal		1
16	88713.0870	Tool for assembling water pump front seal		1
17	88713.2669	Roller cage fitting tool on primary shaft		1
18	88713.2906	Wrench to tighten oil filter cartridge		1
19	88713.0944	Wrench to tighten oil filter cartridge		1
20	88713.1886	Engine canvas		1

NOTES NO.	CODE NO.	DESCRIPTION	VALIDITY	Q.TY

CATALOGUE No: 915.1.290.1F
ISSUED: 10 - 11

DRAWING 001a Workshop service tools

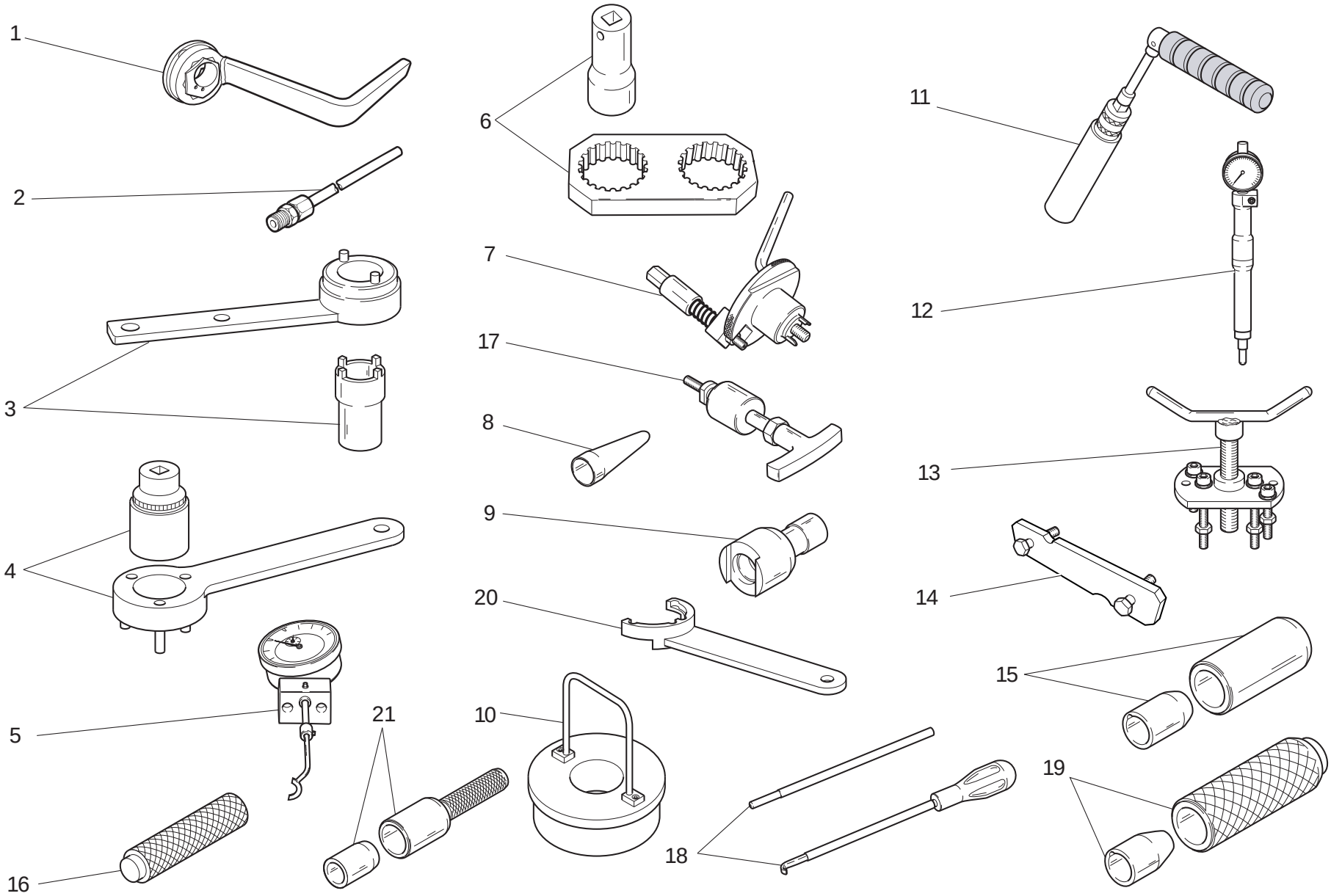

DRAWING 001a Workshop service tools

NOTES NO.	CODE NO.	DESCRIPTION	VALIDITY	Q.TY
1	88713.3497	Wrench for tensioning mobile belt tensioner		1
2	88713.1010	Union for exhaust gas suction		1
3	88713.1805	Driving roller tightening tool		1
4	88713.2102	Primary drive gear tightening tool		1
5	88765.1518	Valve lift gauge		1
6	88713.1806	Reaction tool for belt roller tightening		1
7	88713.2011	Tool to hold crankshaft in TDC position		1
8	88713.1920	Tool to fit O-rings onto stud bolts		1
9	88713.1821	Wrench to tighten tensioning bolts		1
10	88713.2870	Con-rod guiding tool		1
11	88713.2877	Spark plug tool		1
12	88713.2090	T.D.C. control gauge		1
13	88713.1749	Drive roller puller		1
14	88765.1623	Belt roller timing tool		1
15	88713.2861	Tool to fit seals on camshafts		1
16	88713.1980	Drift to drive retainers onto shafts		1
17	88713.1994	Rocker shaft extractor		1
18	88713.2069	Rocker spring pre-load compound kit		1
19	88713.2834	Snap ring installation tool		1
20	88713.3219	Reaction tool for belt roller tightening		1
21	88713.3521	Punch tool for driving seal ring		1

NOTES NO.	CODE NO.	DESCRIPTION	VALIDITY	Q.TY

CATALOGUE No: 915.1.290.1F
ISSUED: 10 - 11

DRAWING 001b Workshop service tools

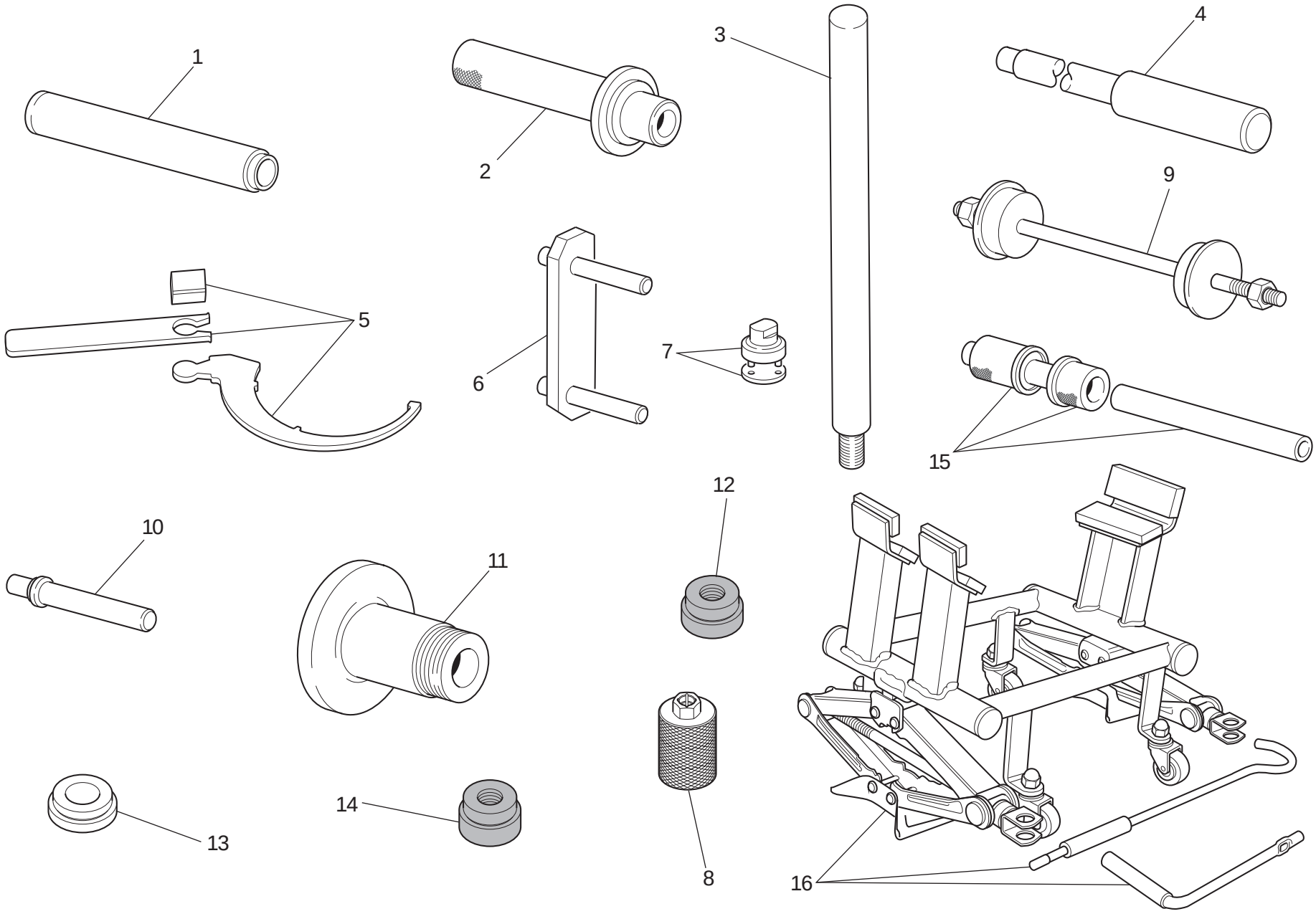

DRAWING 001b Workshop service tools

NOTES NO.	CODE NO.	DESCRIPTION	VALIDITY	Q.TY
1	88713.1072	Stopper for driving the half bearing of the steering head base		1
2	88713.1068	Stopper for assembling the rear fork roller bearings		1
3	88713.2855	Bushing support bar (OHLINS)		1
4	88713.1074	Stopper for disassembling the swingarm pivot		1
5	88713.3211	Wrench for adjusting the eccentric hub		1
6	88713.1515	Frame/engine mount		1
7	88713.1058	Wrench for assembling the steering head cap		1
8	88713.2854	Bush for installing/removing the fork plug (OHLINS)		1
9	88713.1062	Tool for assembling the steering head bearings		1
10	88713.1071	Stopper for assembling the rocker needle bearings		1
11	88713.2951	Tool for balancing rear wheel		1
12	88713.2857	Tool for removing the sliding bushings (OHLINS)		1
13	88713.2856	Bar guide tool (OHLINS)		1
14	88713.2858	Tool for installing the sliding bushings (OHLINS)		1
15	88713.2409	Tool for assembling the swingarm ball bearings		1
16	88713.3396	Bench for engine repair		1

CATALOGUE No: 915.1.290.1F
ISSUED: 10 - 11

DRAWING 001c Dds (2) tester

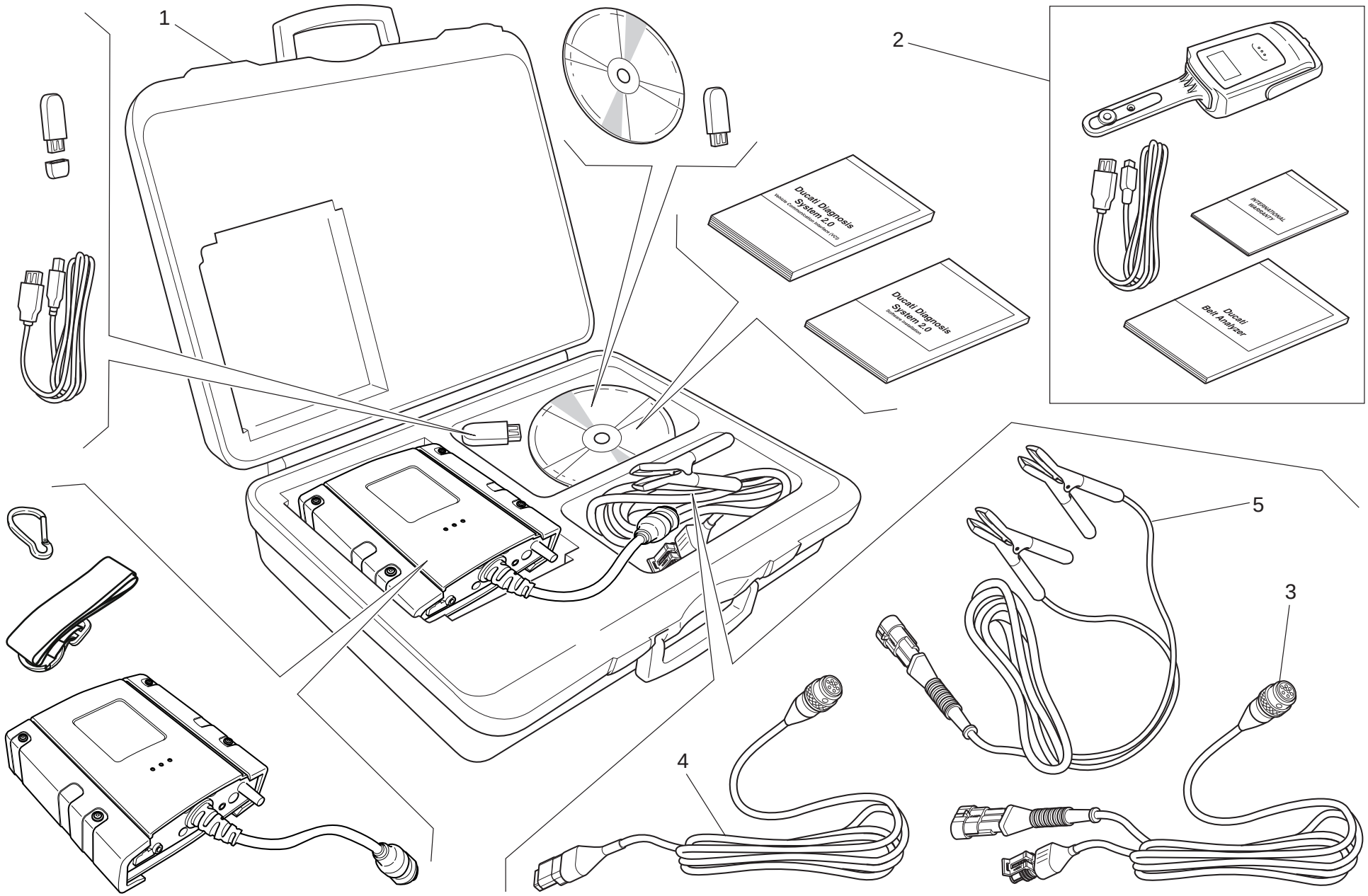

DRAWING 001c Dds (2) tester

NOTES NO.	CODE NO.	DESCRIPTION	VALIDITY	Q.TY
1	97900.0252	DDS 2 (Ducati Diagnosis System 2.0)		1
2	97900.0253	Belt tensioning kit		1
3	97900.0254	Main cable (Serial)		1
4	97900.0255	Main cable (CAN)		1
5	97900.0256	Battery mains cable		1

CATALOGUE No: 915.1.290.1F
ISSUED: 10 - 11

DRAWING 002 Gearchange control

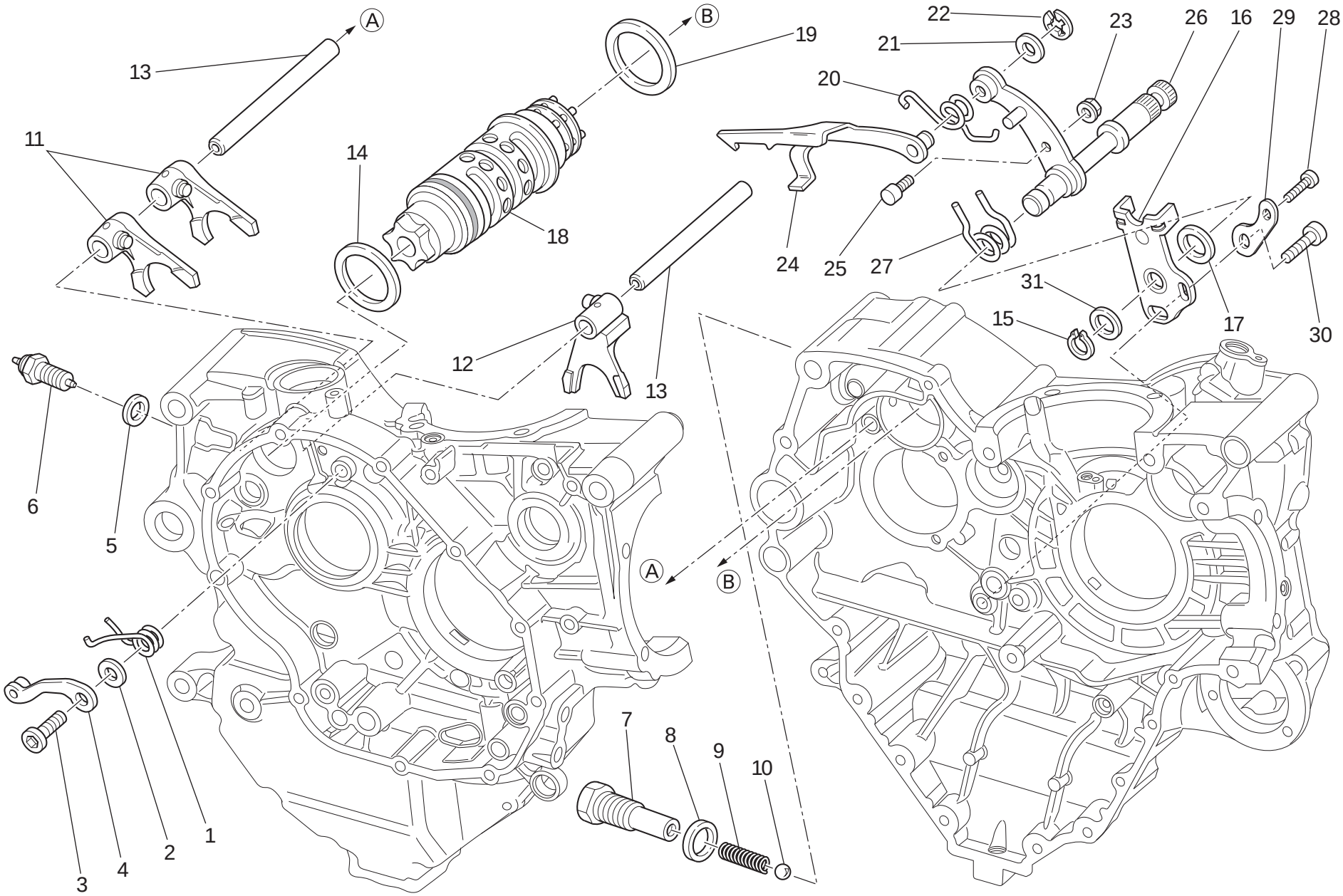

DRAWING 002 Gearchange control

NOTES NO.	CODE NO.	DESCRIPTION	VALIDITY	Q.TY
1	799.1049.1A	Return spring		1
2	852.1053.2A	Washer		1
3	779.1039.1A	Special screw		1
4	455.2.003.1A	Gear stopper assembly		1
5	852.5.024.1A	Gasket th.1		1
6	539.1021.1B	Neutral indicator switch		1
7	779.1203.3A	Special screw		1
8	0272.91090	Gasket		1
9	0660.13.143	Gear selector spring		1
10	76835.1134	Ball		1
11	180.Z.003.1A	1st,4th-2nd,3rd gear selector fork		2
12	180.Z.004.1A	5th,6th gear selector fork		1
13	821.1268.1A	Fork pin		2
14	852.1005.1A	Shim th. 1		1
15	73500.1542	Circlip		1
16	826.1029.2A	Stopper plate		1
17	881.1012.1A	Centering ring		1
18	182.Z.001.1A	Complete gearbox drum		1
19	852.1094.1A	Shim th. 0.9		1
20	799.1482.1A	Fork return spring		1
21	0400.09.050	Shim th. 0.5		1
21	0765.92.205	Shim th. 0.2		2
22	884.5.034.1A	Ring		1
23	748.1040.1A	Nut		1
24	180.1008.1A	Gearbox drum control fork		1
25	0660.13.165	Gearchange lever pin		1
26	821.1001.1A	Pin with gearchange lever		1
27	0799.13.110	Gearchange lever return spring		1
28	771.5.067.0Z	Screw		1
29	713.1915.1A	Spacer		1
30	771.5.125.0Z	Screw		1
31	0400.29.125	Shim th. 0.2		2
31	0400.29.126	Shim th. 0.5		1

CATALOGUE No: 915.1.290.1F
ISSUED: 10 - 11

DRAWING 003 Gearbox

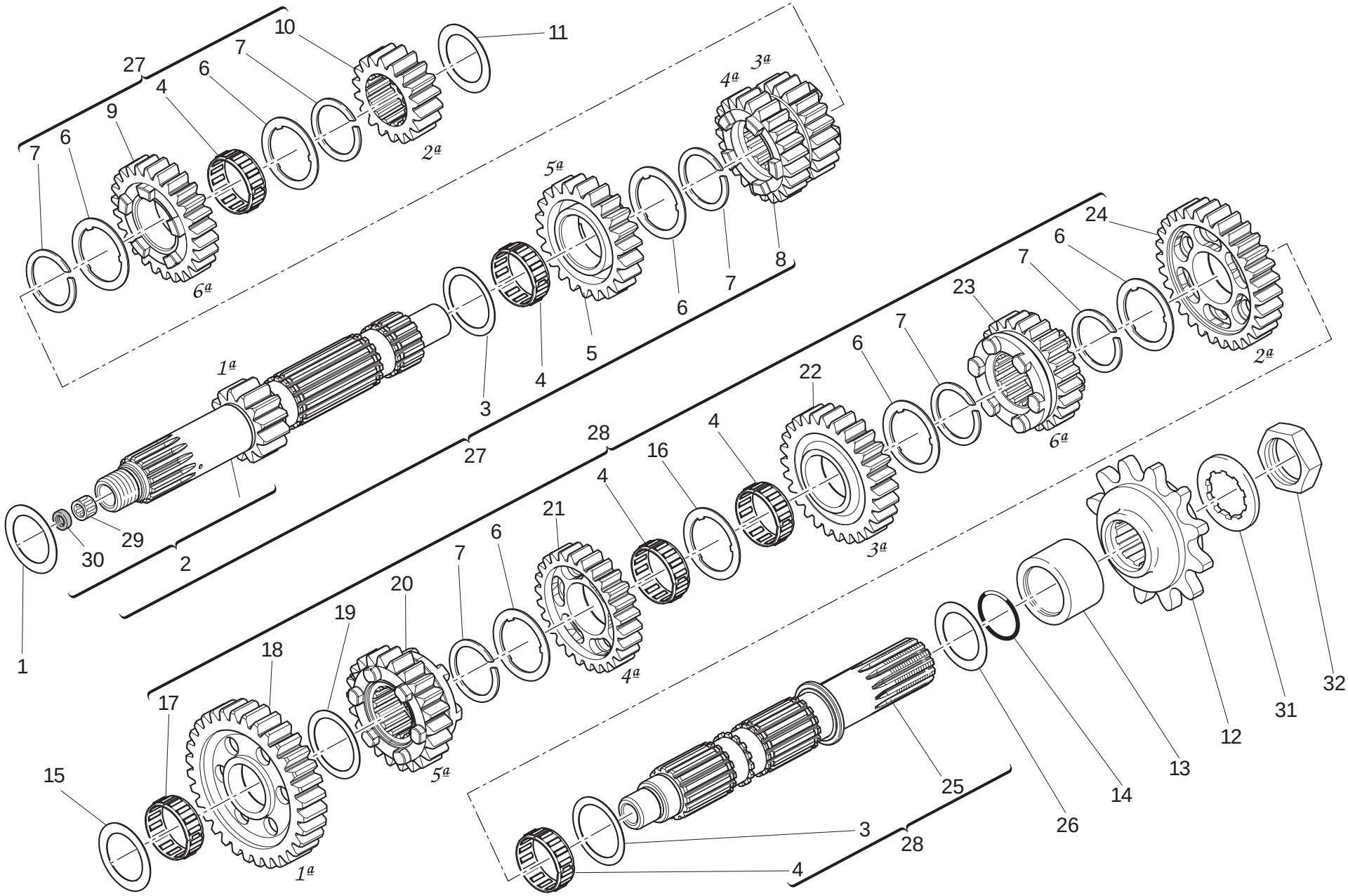

DRAWING 003 Gearbox

NOTES NO.	CODE NO.	DESCRIPTION	VALIDITY	Q.TY
1	0251.47.054	Shim th. 1.2		1
2	150.2.105.1A	Gearbox main shaft		1
3	0670.16.150	Shim th. 0.5		2
4	701.4.005.1A	Needle bearing		5
5	172.1.004.3C	Driving gear 5th sp.		1
6	856.1.001.1A	Grooved washer th. 0.5		6
7	0670.16.145	Snap ring		6
8	172.1.003.3C	Driving gear 3rd/4th sp.		1
9	172.1.005.3C	Driving gear 6th sp.		1
10	172.1.002.1B	Driving gear 2nd sp.		1
11	713.1.014.1E	Shim th. 1.6		1
12	449.1.053.1A	Chain sprocket		1
13	713.1.393.1A	Spacer		1
14	463.2.053.7A	O-ring		1
15	713.1.266.1A	Spacer th. 3,15		1
16	856.1.031.1A	Grooved washer th. 0.5		1
17	76402.0002	Needle bearing		1
18	172.1.218.2A	Driven gear 1st sp.		1
19	0670.16.155	Shim th. 1		1
20	172.1.010.3C	Driven gear 5th sp.		1
21	172.1.009.1C	Driven gear 4th sp.		1
22	172.1.008.1C	Driven gear 3rd sp.		1
23	172.1.011.3C	Driven gear 6th sp.		1
24	172.1.219.2A	Driven gear 2nd sp.		1
25	149.1.061.1A	Gearbox lay shaft		1
26	0670.16.170	Shim th. 0.8		1
27	150.2.106.1A	Complete main shaft		1
28	150.2.092.3A	Complete lay shaft		1
29	702.5.044.1A	Needle bearing		1
30	930.4.002.2A	Seal ring		1
31	851.1.004.1A	Lock washer		1
32	750.1.007.1A	Nut		1

CATALOGUE No: 915.1.290.1F
ISSUED: 10 - 11

DRAWING 004 Clutch

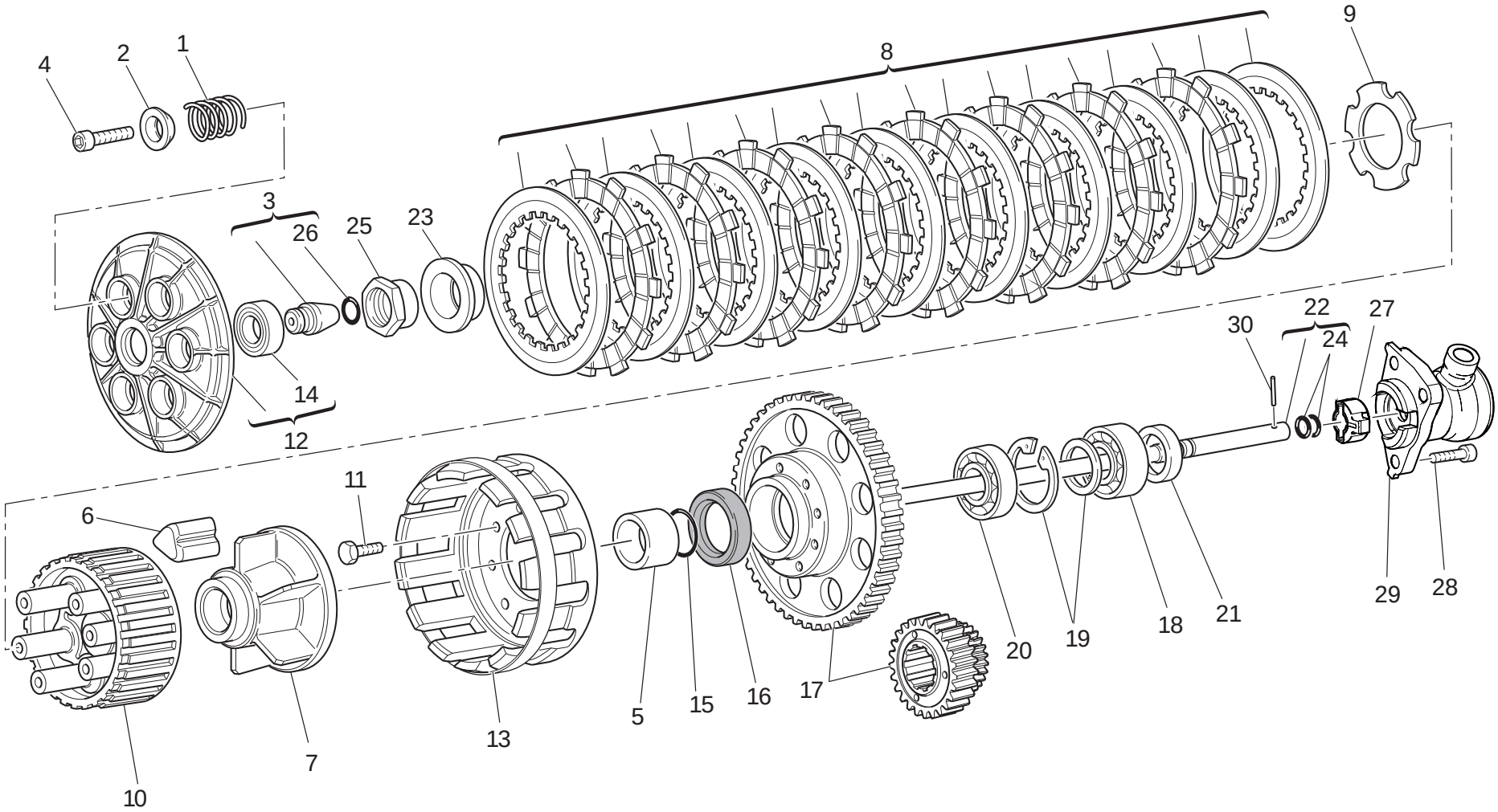

DRAWING 004 Clutch

NOTES NO.	CODE NO.	DESCRIPTION	VALIDITY	Q.TY
1	799.1.253.1A	Clutch spring		6
2	841.1.051.1B	Retainer		6
3	818.2.009.1A	Clutch control pin		1
4	771.5.043.8B	Screw		6
5	713.1.393.3A	Spacer		1
6	764.1.003.2B	Rubber pad		12
7	162.1.001.1C	Plate holder hub		1
8	190.2.020.2A	Clutch plates set		1
9	851.1.001.1B	Lock washer		1
10	196.1.001.1D	Clutch drum		1
11	70610.8120	Screw		8
12	194.2.043.1A	Pressure plate		1
13	198.Z.001.1A	Clutch housing		1
14	702.5.053.1A	Bearing		1
15	463.2.053.7A	O-ring		1
16	930.4.035.1A	Seal ring		1
17	170.Z.004.1A	Clutch/crankshaft gears pair		1
18	702.5.051.1A	Bearing		1
19	881.2.001.1A	Circlip - spacer		1
20	702.4.017.1A	Bearing		1
21	0660.16.145	Spacer		1
22	117.2.112.1A	Clutch control rod		1
23	710.1.127.1A	Bush		1
24	886.4.173.1A	O-ring		2
25	750.1.045.1A	Nut		1
26	886.4.118.1A	O-Ring		1
27	713.1.926.1A	Anti-rotation insert		1
28	771.5.065.2BB	Screw		3
29	195.4.003.1C	Piston assembly (anti-rotation insert)		1
30	860.5.025.1A	Roller		1

CATALOGUE No: 915.1.290.1F
ISSUED: 10 - 11

DRAWING 005 Clutch-side crankcase cover

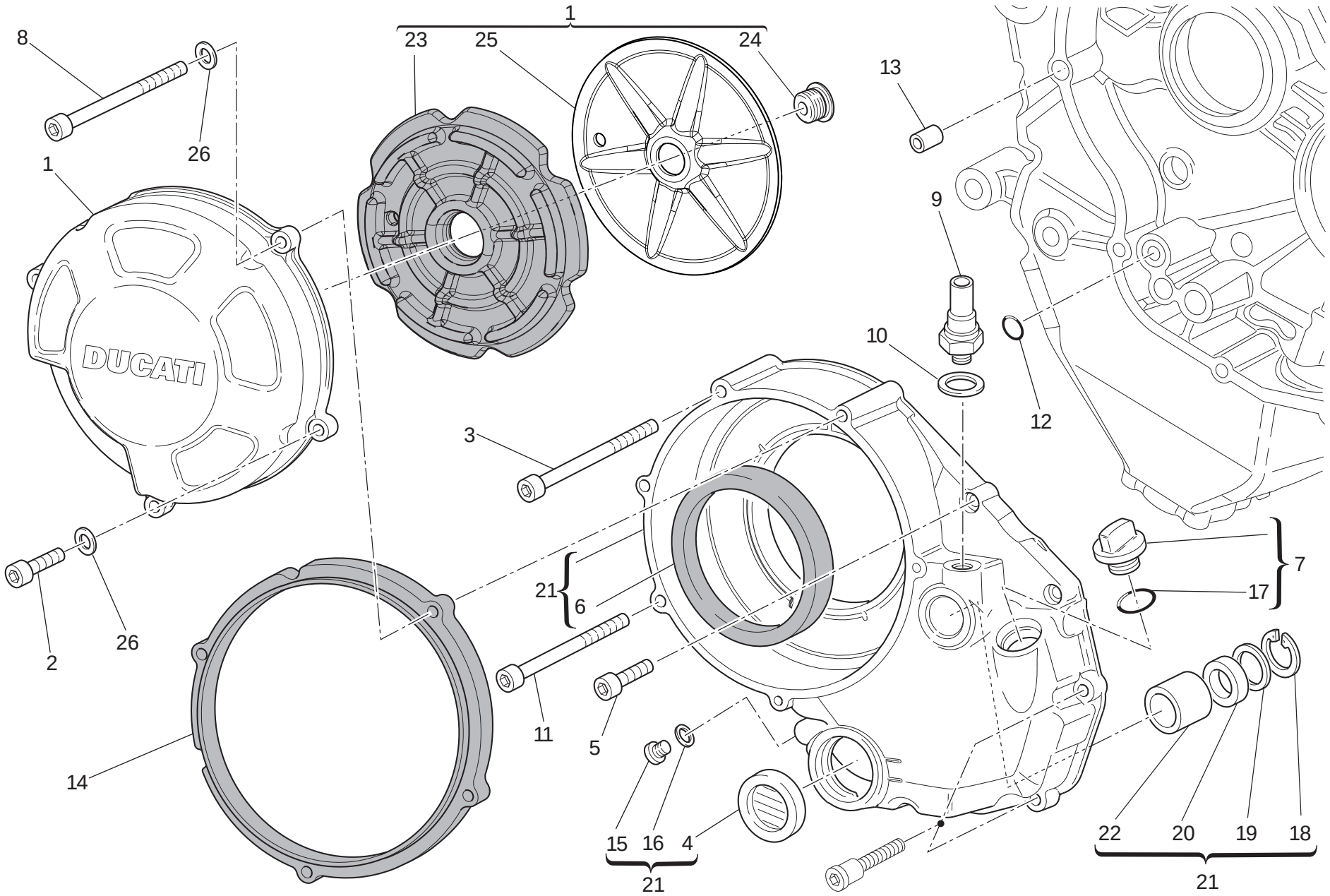

DRAWING 005 Clutch-side crankcase cover

NOTES NO.	CODE NO.	DESCRIPTION	VALIDITY	Q.TY
1	243.2.125.1B	Cover clutch side (BLACK)		1
2	771.1.379.1A	Screw		2
3	771.5.078.3B	Screw		1
4	254.4.001.2A	Oil level sight glass		1
5	771.5.069.3B	Screw		4
6	930.4.034.1A	Ring		1
7	893.2.013.1A	Complete cap		1
8	771.1.378.1A	Screw		2
9	539.4.030.2A	Engine oil pressure sensor		1
10	852.1.195.1A	Washer		1
11	771.5.079.3B	Screw		1
12	886.4.132.1A	O-ring		1
13	711.1.160.1A	Locating bush		1
14	788.1.106.3A	Clutch cover gasket		1
15	780.5.001.2A	Cap		1
16	852.5.024.1A	Gasket th.1		1
17	93823.3075	O-Ring		1
18	884.5.013.1A	Circlip		1
19	852.1.135.1A	Shim th. 1		1
20	930.4.021.1A	Seal ring		1
21	243.2.115.1BE	Cover clutch side (BLACK)		1
22	0665.49.680	Bush		1
23	486.1.082.1A	Panel		1
24	779.1.501.1A	Screw		1
25	827.1.433.1A	Plate		1
26	852.1.264.1A	Washer		4

NOTES NO.	CODE NO.	DESCRIPTION	VALIDITY	Q.TY

CATALOGUE No: 915.1.290.1F
ISSUED: 10 - 11

DRAWING 006 Connecting rods

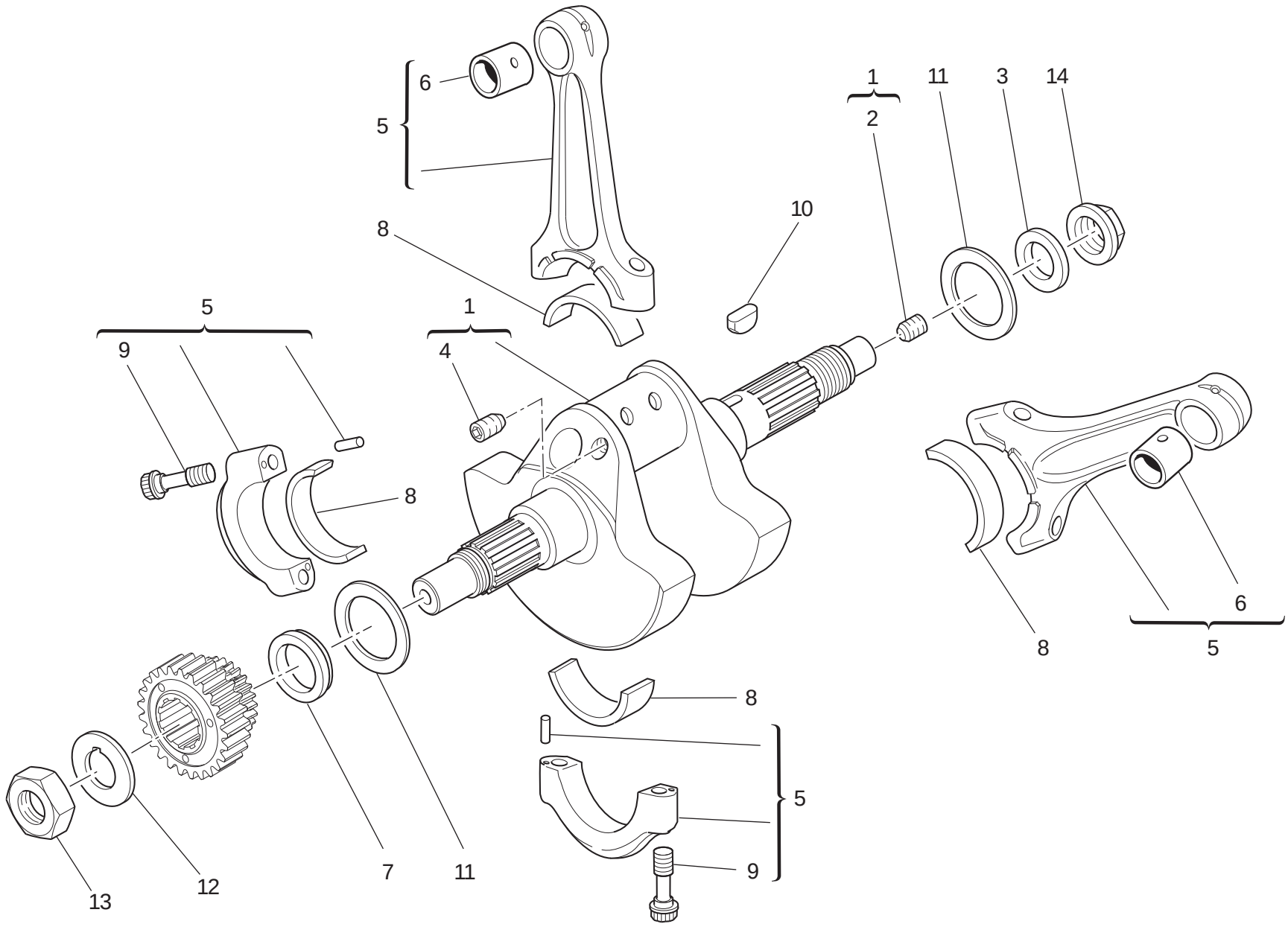

DRAWING 006 Connecting rods

NOTES NO.	CODE NO.	DESCRIPTION	VALIDITY	Q.TY
1	146.2.143.1B	Crankshaft		1
2	779.1.109.2A	Special screw		1
3	852.1.269.1A	Washer		1
4	779.1.547.1A	Special screw		2
5	158.2.020.3A	Connecting rods pair		1
6	711.1.089.1A	Bush		2
7	710.1.061.1A	Spacer		1
8	112.1.012.1AB	Half-bearing (BLUE)		2
8	112.1.012.1AC	Half-bearing (YELLOW)		2
9	779.1.404.3B	Special screw		4
10	680.1.013.1A	Woodruff key		1
11	852.1.104.1H	Shim th. 2.25		2
11	852.1.104.2A	Shim th. 1.9		2
11	852.1.104.2B	Shim th. 1.95		2
11	852.1.104.2C	Shim th. 2		2
11	852.1.104.2D	Shim th. 2,05		2
11	852.1.104.2E	Shim th. 2,1		2
11	852.1.104.2F	Shim th. 2,15		2
11	852.1.104.2G	Shim th. 2.2		2
11	852.1.104.2I	Shim th. 2.3		2
11	852.1.104.2J	Shim th. 2.35		2
11	852.1.104.1K	Shim th. 2,4		2
11	852.1.104.1L	Shim th. 2,45		2
11	852.1.104.1M	Shim th. 2.5		2
11	852.1.104.1N	Shim th. 2.55		2
12	851.1.010.1A	Lock washer		1
13	750.1.057.1A	Nut		1
14	750.1.012.1D	Special nut		1

CATALOGUE No: 915.1.290.1F
ISSUED: 10 - 11

CATALOGUE No: 915.1.290.1F
ISSUED: 10 - 11

DRAWING 007 Cylinders - pistons

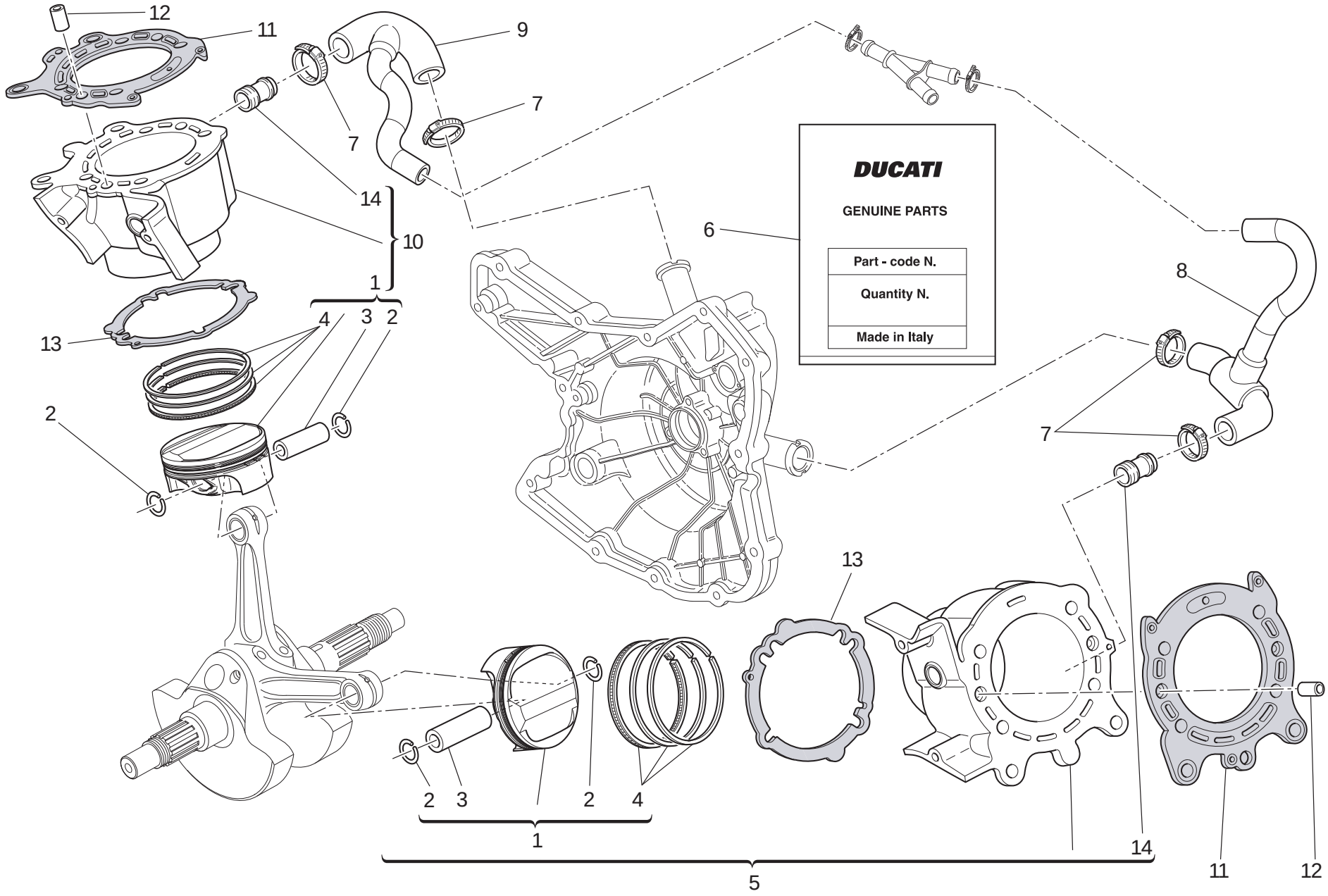

DRAWING 007 Cylinders - pistons

NOTES NO.	CODE NO.	DESCRIPTION	VALIDITY	Q.TY
1	122.2.167.2A	Complete piston		2
2	121.1.079.1A	Piston pin circlip		4
3	121.1.078.1B	Piston pin		2
4	121.2.051.2A	Piston rings set		2
5	120.Z.003.1B	Cylinder-piston fit (horizontal)		1
6	791.2.044.1A	Gaskets set		1
7	741.4.192.1A	Clamp		4
8	800.1.174.3A	Horizontal cylinder water inlet hose		1
9	800.1.175.2A	Vertical cylinder water inlet hose		1
10	120.Z.004.1B	Cylinder-piston fit (vertical)		1
11	786.1.092.2A	Head-cylinder gasket		2
12	711.1.219.1A	Bush		4
13	786.1.094.1A	Cylinder-crankcase gasket		2
14	668.1.001.4A	Water pump delivery filler		2

CATALOGUE No: 915.1.290.1F
ISSUED: 10 - 11

DRAWING 008 Timing system

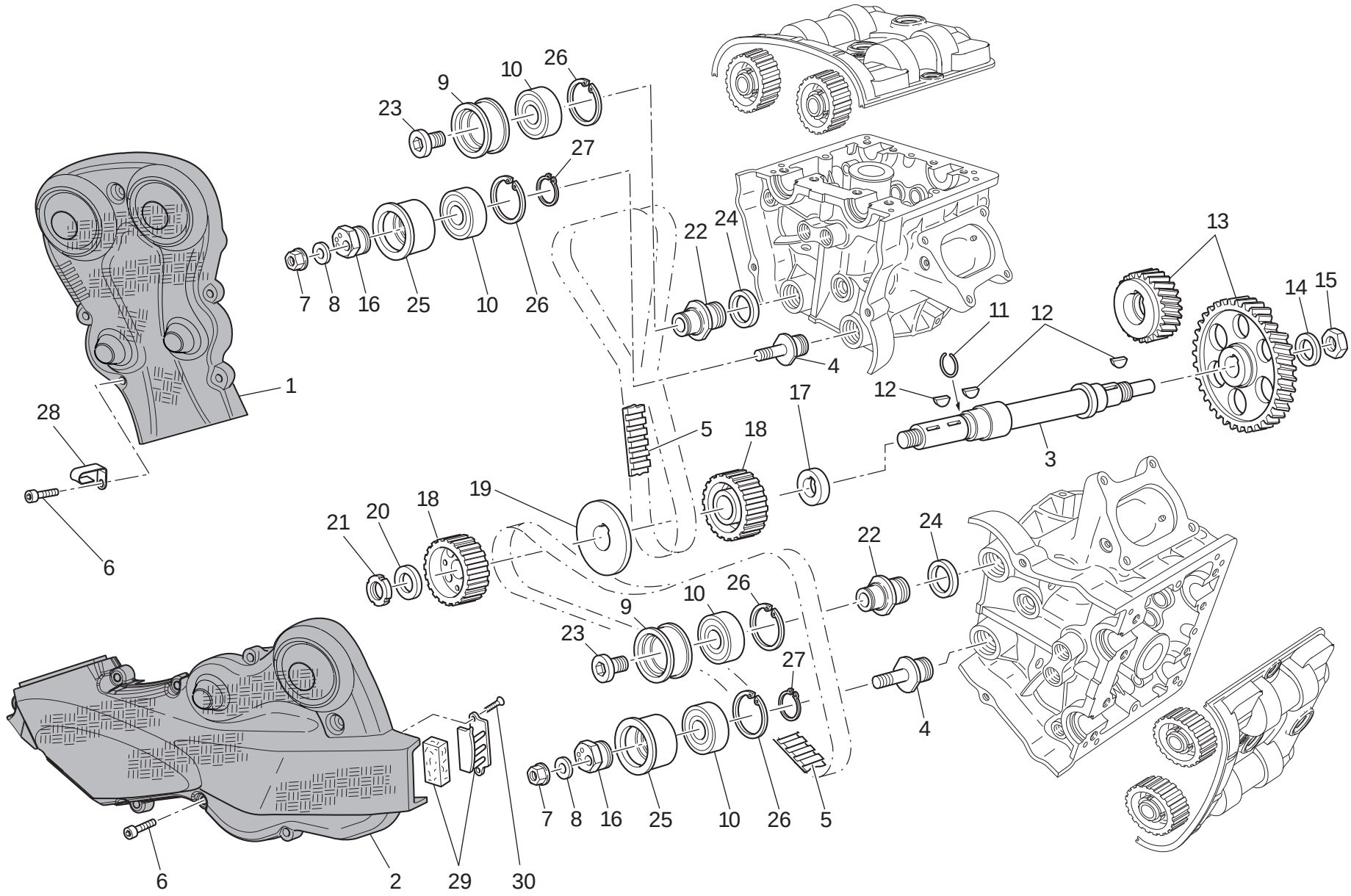

DRAWING 008 Timing system

NOTES NO.	CODE NO.	DESCRIPTION	VALIDITY	Q.TY
1	245.1.109.1A	Vertical belt outer cover (CARBON)		1
2	245.1.108.1A	Horizontal belt outer cover (CARBON)		1
3	147.1.014.2A	Timing lay shaft		1
4	451.1.046.1A	Tensioner roller pin		2
5	737.4.025.1A	Timing drive toothed belt		2
6	771.1.380.1A	Screw		13
7	749.4.008.1A	Nut		2
8	852.1.174.1A	Washer		2
9	451.1.018.2A	Fixed tensioner bush		2
10	702.4.058.1A	Bearing		4
11	882.1.003.1A	Snap ring		1
12	680.1.013.1A	Woodruff key		3
13	171.Z.003.1A	Timing gears pair		1
14	851.1.013.1A	Lock washer		1
15	750.1.160.1A	Nut		1
16	451.1.043.1A	Tensioner eccentric		2
17	716.1.128.1A	Spacer		1
18	255.1.010.4B	Timing belt roller		2
19	856.1.062.2A	Belt roller separating washer		1
20	716.1.072.2A	Spacer		1
21	703.5.006.2A	Elastic-stop ring nut		1
22	451.1.017.1A	Fixed tensioner roller pin		2
23	779.1.187.1A	Setscrew		2
24	713.1.409.1A	Spacer		2
25	451.1.047.1A	Movable tensioner roller bush		2
26	73503.3804	Snap ring		4
27	73500.2054	Snap ring		2
28	830.1.494.1B	Fairlead		1
29	245.2.107.1A	Filter and holder		1
30	772.5.034.1C	Screw		2

CATALOGUE No: 915.1.290.1F
ISSUED: 10 - 11

DRAWING 009 Filters and oil pump

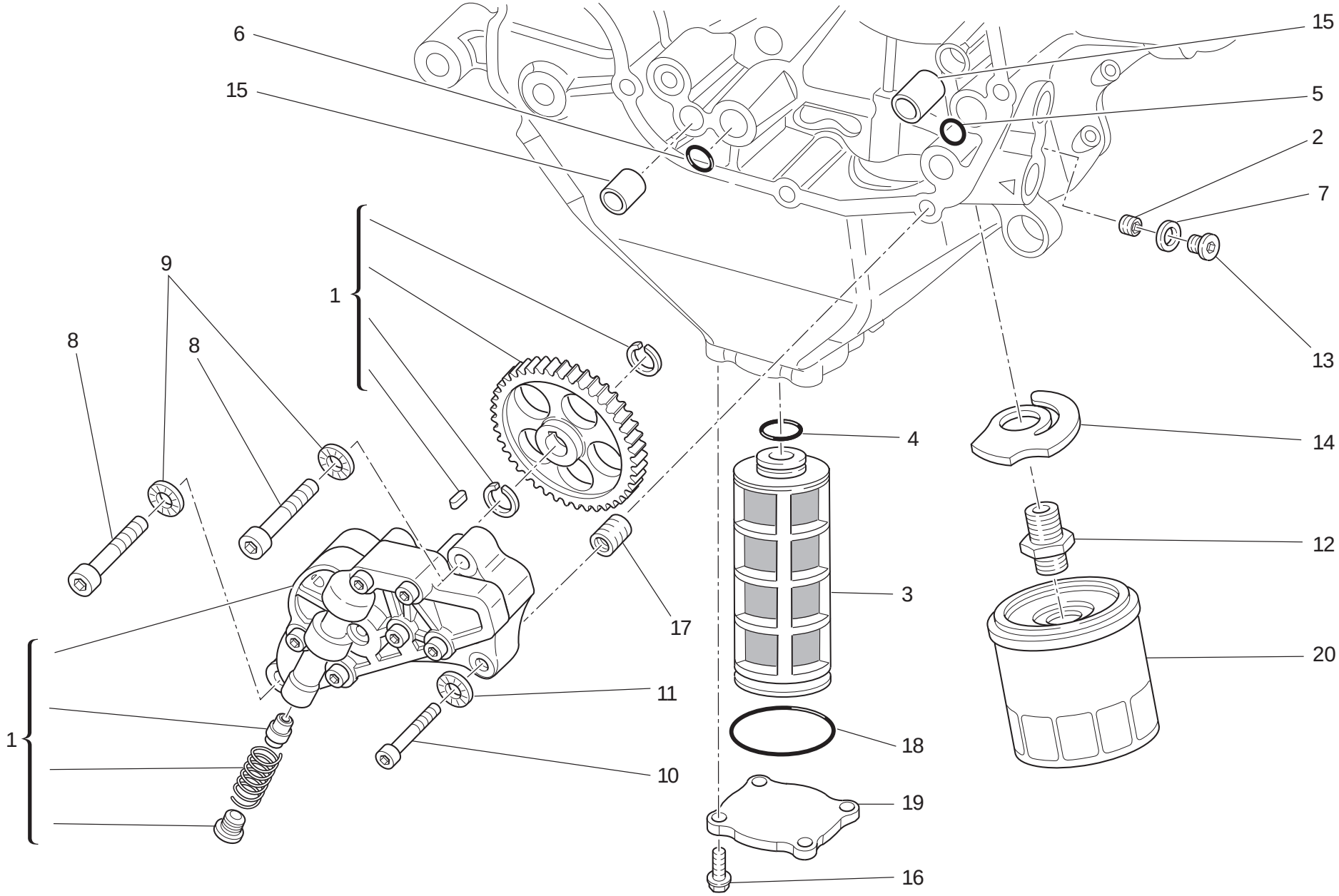

DRAWING 009 Filters and oil pump

NOTES NO.	CODE NO.	DESCRIPTION	VALIDITY	Q.TY
1	174.Z.002.1A	Complete oil pump		1
2	778.4.004.1A	Threaded dowel		1
3	894.1.020.1A	Oil net filter		1
4	886.4.033.1A	O-ring		1
5	886.4.132.1A	O-ring		1
6	886.4.037.1A	O-Ring		1
7	852.1.195.1A	Washer		1
8	771.5.129.8B	Screw		2
9	852.1.174.1A	Washer		2
10	771.5.069.8B	Screw		1
11	852.1.172.1A	Washer		1
12	815.1.028.1A	Nipple		1
13	779.1.162.2A	Cap		1
14	799.2.077.2A	Bypass spring		1
15	0759.49.280	Locating bush		2
16	772.1.060.1A	Screw		4
17	0670.49.310	Reduction bush		1
18	886.4.034.1A	O-ring		1
19	247.1.290.1AB	Cover (BLACK)		1
20	444.4.003.5A	Oil filter cartridge		1

NOTES NO.	CODE NO.	DESCRIPTION	VALIDITY	Q.TY

CATALOGUE No: 915.1.290.1F
ISSUED: 10 - 11

DRAWING 010 Crankcase halves

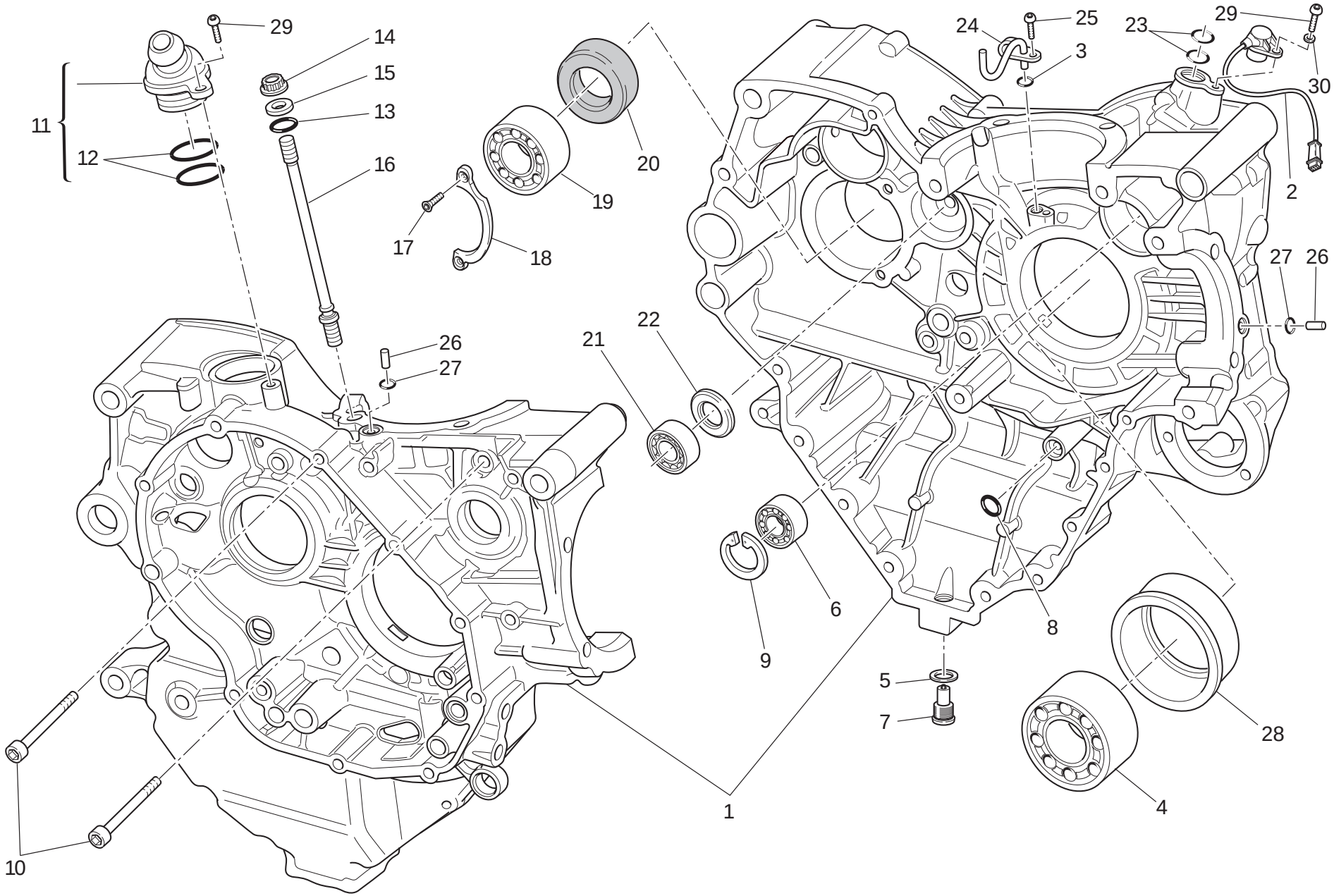

DRAWING 010 Crankcase halves

NOTES NO.	CODE NO.	DESCRIPTION	VALIDITY	Q.TY
1	225.2.249.2B	Complete half-crankcases pair		1
2	552.4.132.1B	Rpm/timing sensor		1
3	886.5.013.1A	O-Ring		1
4	751913380	Bearing		1
5	852.5.042.1A	Copper gasket sp. 1,5		1
6	702.5.008.1A	Bearing		1
7	893.2.006.2A	Cap		1
8	886.4.132.1A	O-ring		1
9	73503.3380	Circlip		1
10	7715.139.8B	Screw		2
11	593.2.042.1A	Breather valve		1
12	463.2.022.2A	O-Ring		2
13	886.4.118.1A	O-Ring		8
14	748.1050.1A	Nut		8
15	856.1064.2A	Special washer		8
16	766.1055.3B	Stud bolt for fastening head cylinder		8
17	72094.1616	Screw		2
18	826.1012.1A	Keep plate		1
19	702.4.013.1A	Bearing		1
20	930.4.022.1A	Seal ring		1
21	702.4.033.1A	Bearing		1
22	0370.49.250	Washer		1
23	886.4.033.1A	O-ring		2
24	875.1146.1A	Jet		1
25	775.1031.1B	Screw		1
26	860.1005.1B	Locating dowel		2
27	886.1024.1A	O-Ring		2
28	710.1125.1A	Bearing holder bush		1
29	775.5.021.1A	Screw		2
30	853.1003.1A	Spring washer		1

CATALOGUE No: 915.1290.1F
ISSUED: 10 - 11

DRAWING 010a Crankcase halves

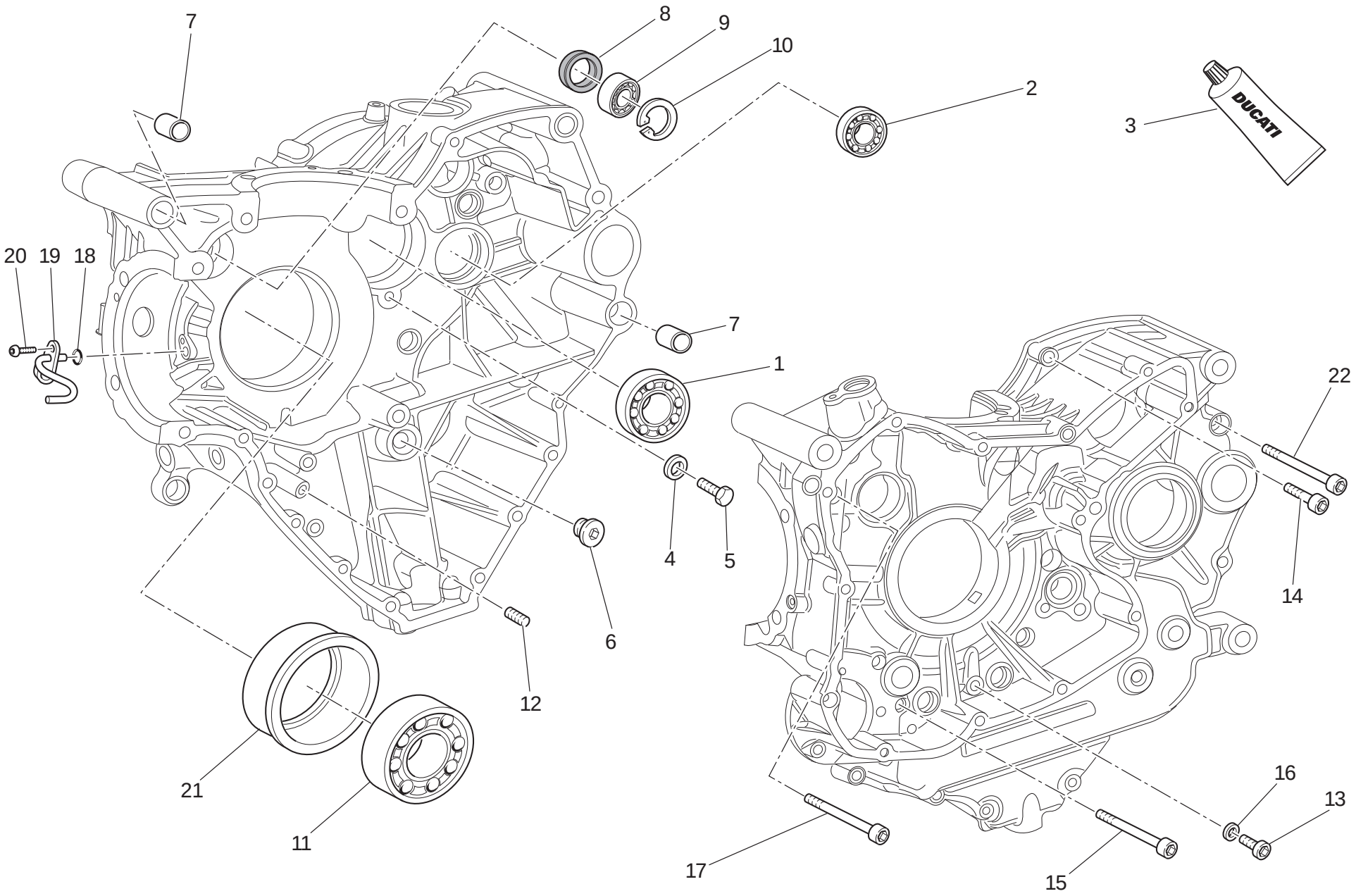

DRAWING 010a Crankcase halves

NOTES NO.	CODE NO.	DESCRIPTION	VALIDITY	Q.TY
1	702.5.019.1A	Bearing		1
2	702.4.033.1A	Bearing		1
3	94247.0014	Fluid sealant		1
4	713.1.140.1A	Spacer		2
5	770.5.250.8B	Screw		2
6	780.1.072.1A	Cap		1
7	711.1.095.1A	Bush		2
8	930.4.123.1A	Seal ring		1
9	75794.1542	Bearing		1
10	73503.3380	Circlip		1
11	702.4.020.1A	Bearing		1
12	779.5.062.1A	Threaded dowel		1
13	773.5.061.8B	Screw		1
14	771.5.072.3B	Screw		8
15	771.5.080.8B	Screw		2
16	852.5.023.1A	Gasket		1
17	771.5.139.8B	Screw		2
18	886.5.013.1A	O-Ring		1
19	875.1.146.1A	Jet		1
20	775.1.031.1B	Screw		1
21	710.1.126.1A	Bearing holder bush		1
22	771.5.136.3B	Screw		3

CATALOGUE No: 915.1.290.1F
ISSUED: 10 - 11

DRAWING 011 Water pump-altr-side crnkcse cover

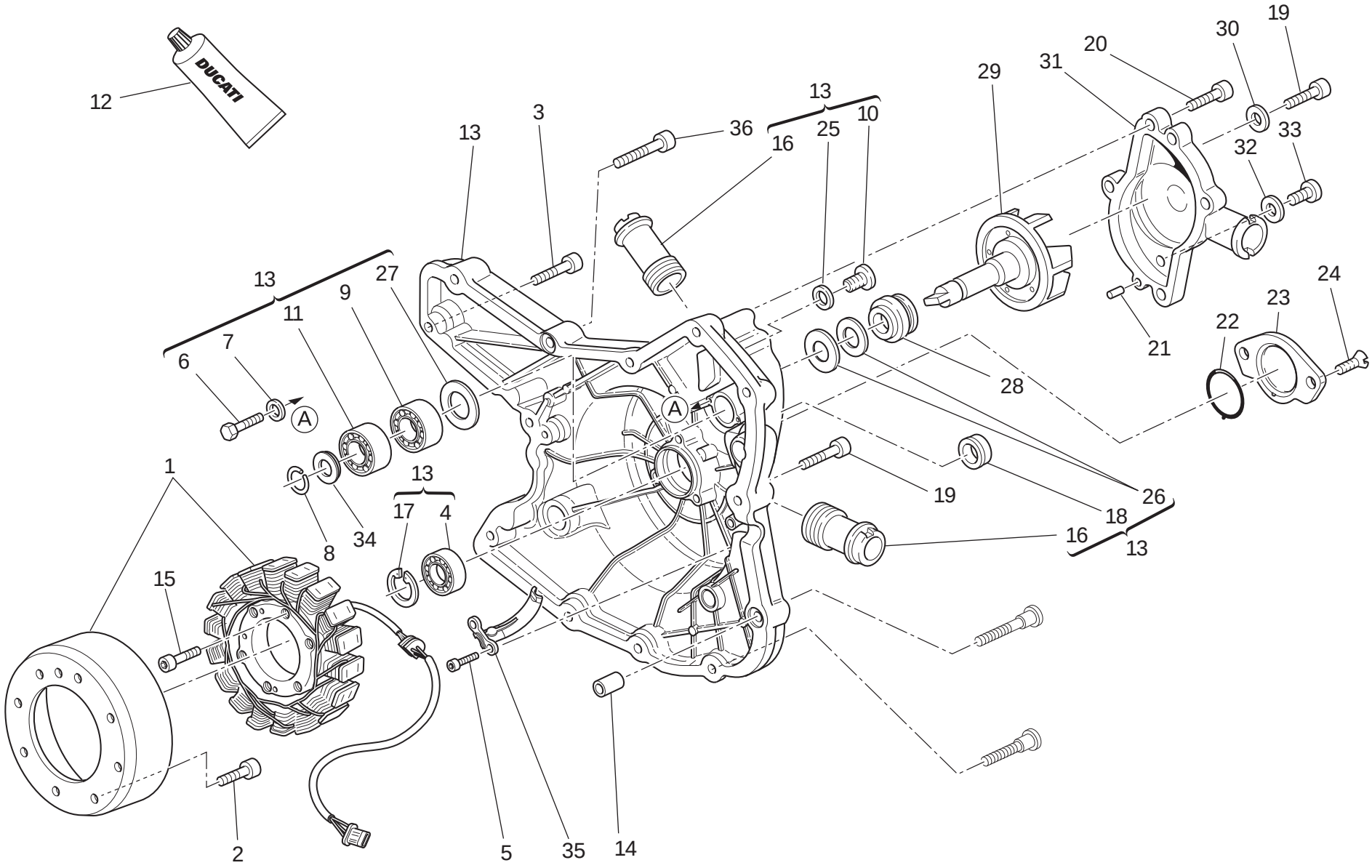

DRAWING 011 Water pump-altr-side crnkcse cover

NOTES NO.	CODE NO.	DESCRIPTION	VALIDITY	Q.TY
1	264.4.061.1A	Generator "KOKUSAN"		1
2	779.1.675.1A	Screw		8
3	771.5.067.3B	Screw		2
4	702.5.008.1A	Bearing		1
5	771.5.064.8B	Screw		2
6	770.5.250.8B	Screw		2
7	852.1.172.1A	Washer		2
8	884.5.011.1A	A 10 Ring		1
9	702.4.010.2A	Bearing		1
10	779.1.026.2A	Screw		1
11	702.4.009.1A	Bearing		1
12	94247.0014	Fluid sealant		1
13	242.2.088.1BC	Generator cover (BLACK)		1
14	711.1.160.1A	Locating bush		2
15	771.5.071.8B	Screw		3
16	668.1.001.4A	Water pump delivery filler		2
17	73503.3380	Circlip		1
18	93783.1524	Seal ring		1
19	771.5.069.3B	Screw		9
20	771.5.066.3B	Screw		4
21	860.1.004.1A	Locating dowel		2
22	886.1.095.1A	O-ring		1
23	247.1.305.1AF	Cover (BLACK)		1
24	777.5.049.3C	Screw		2
25	852.5.026.1A	Aluminium gasket th.1,5		1
26	930.5.005.1A	Seal		1
27	713.1.128.1B	Spacer		1

NOTES NO.	CODE NO.	DESCRIPTION	VALIDITY	Q.TY
28	930.5.006.2B	Mechanical seal		1
29	251.2.008.1A	Water pump fan		1
30	852.5.023.1A	Gasket		1
31	247.2.130.1AC	Complete water pump cover (BLACK)		1
32	852.5.024.1A	Gasket th.1		1
33	780.5.001.2A	Cap		1
34	852.1.114.1A	Washer		1
35	830.1.235.1A	Bracket		1
36	771.5.071.3B	Screw		1

CATALOGUE No: 915.1.290.1F
ISSUED: 10 - 11

DRAWING 012 Electric starting and ignition

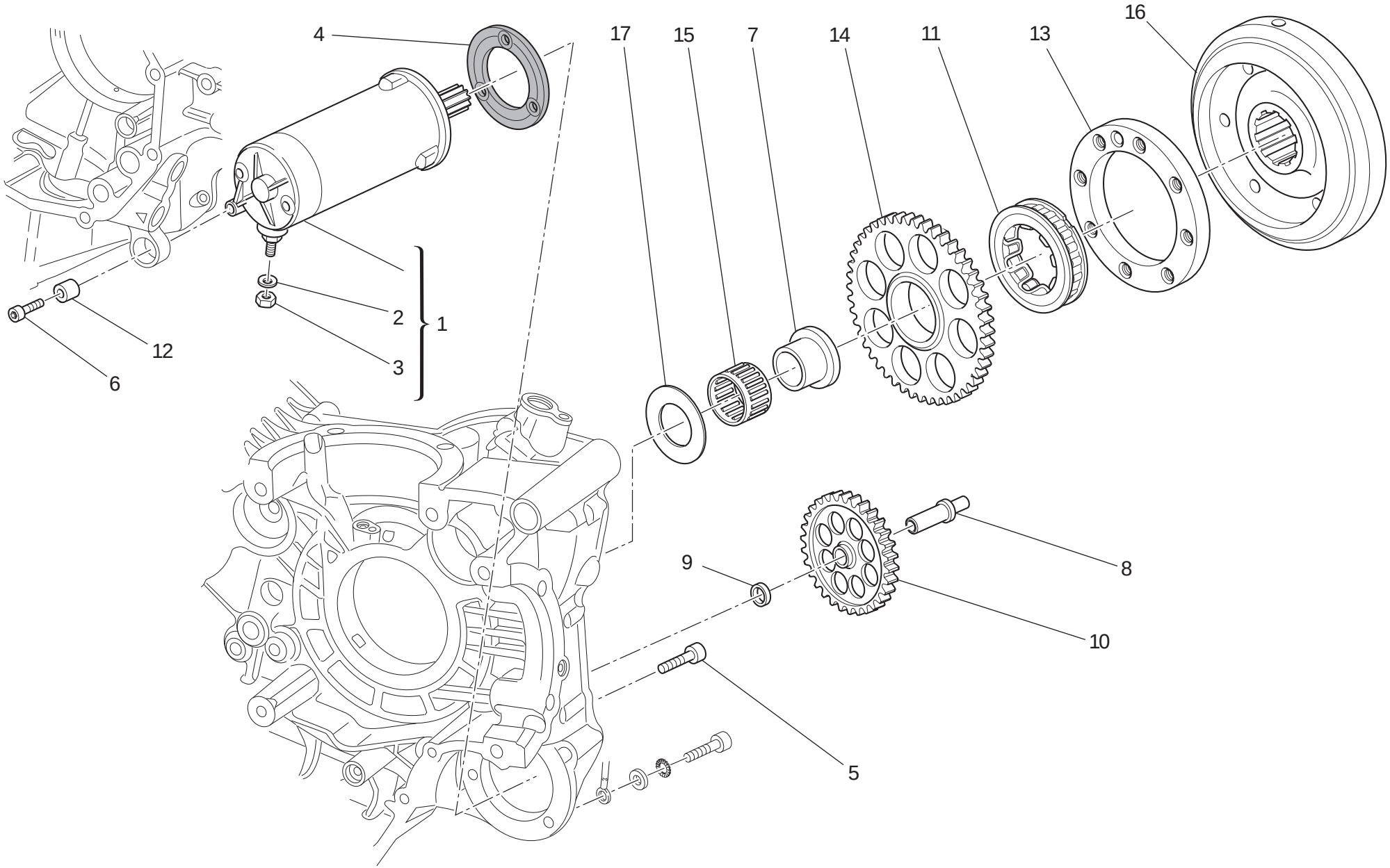

DRAWING 012 Electric starting and ignition

NOTES NO.	CODE NO.	DESCRIPTION	VALIDITY	Q.TY
1	270.4.010.3A	Complete starter motor		1
2	853.1.003.1A	Spring washer		1
3	750.1.121.1A	Nut		1
4	788.1.054.2A	Starter motor gasket		1
5	771.1.049.1A	Screw		2
6	771.1.052.1A	Screw		1
7	881.1.034.1A	Inner ring		1
8	821.1.347.1A	Intermediate gear pin		1
9	713.1.919.1A	Spacer		1
10	176.Z.002.1A	Intermediate gear assembly		1
11	701.4.035.1A	Starter clutch		1
12	700.1.036.1A	Flexible bush		1
13	160.Z.001.1A	Flange		1
14	173.Z.002.1A	Electric starter driven gear		1
15	702.4.018.1A	Needle bearing		1
16	276.Z.001.1A	Ignition flywheel		1
17	856.1.075.1A	Shim		1

CATALOGUE No: 915.1.290.1F
ISSUED: 10 - 11

DRAWING 013 Cylinder head : timing system

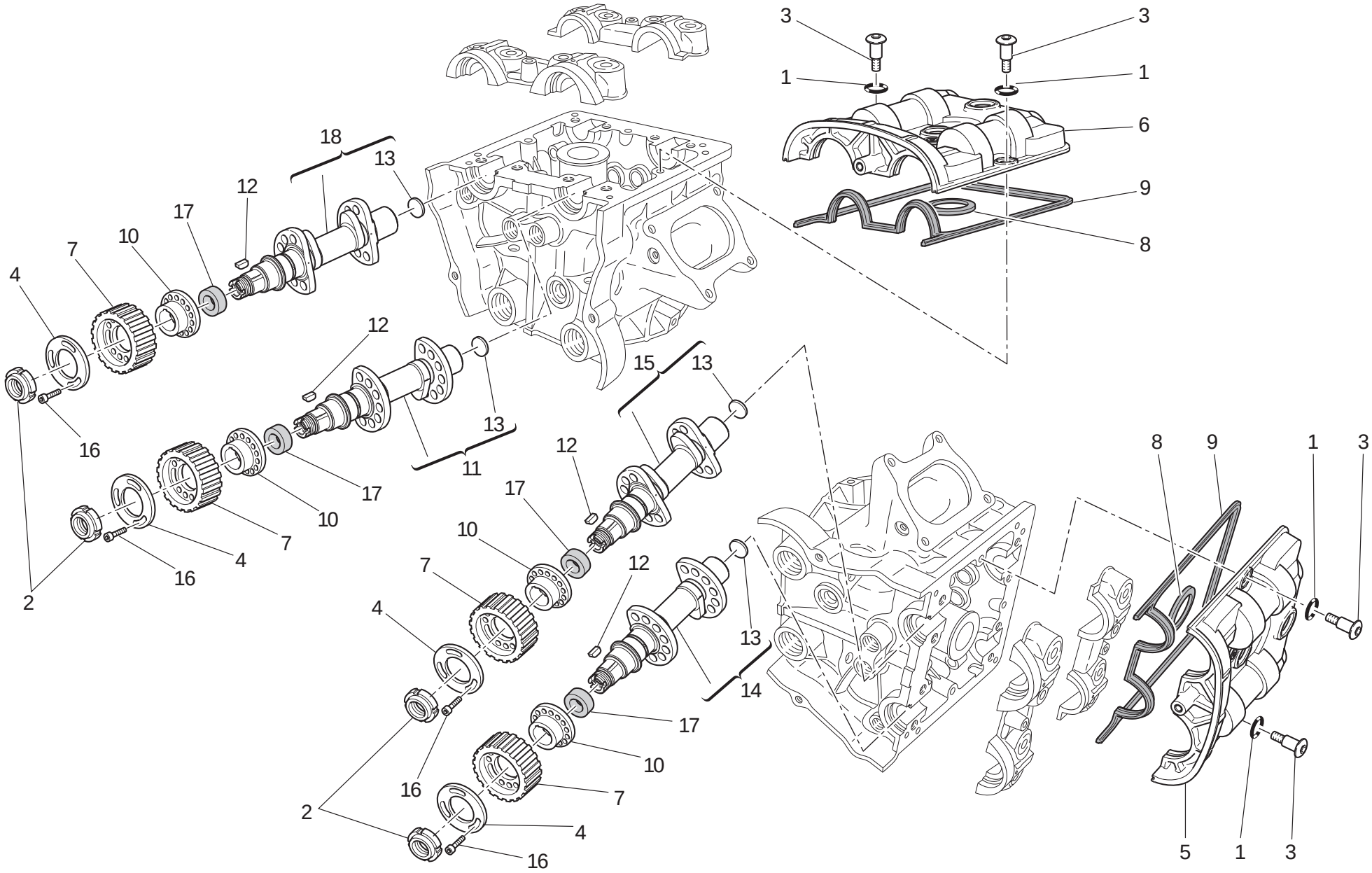

DRAWING 013 Cylinder head : timing system

NOTES NO.	CODE NO.	DESCRIPTION	VALIDITY	Q.TY
1	886.5.051.1A	O-ring		8
2	703.5.002.2A	Ring nut		4
3	779.1.509.3A	Special screw		8
4	856.1.074.3A	Special washer		4
5	247.1.287.1B	Horizontal cover		1
6	247.1.288.1B	Vertical cover		1
7	255.1.019.3A	Timing belt roller		4
8	788.1.094.1A	Gasket		2
9	788.1.093.1A	Head gasket		2
10	160.1.094.1A	Spacer		4
11	148.2.307.1C	Vertical intake camshaft		1
12	680.5.006.1A	Woodruff key		4
13	873.1.005.1A	Cap		4
14	148.2.308.1C	Horizontal exhaust camshaft		1
15	148.2.306.1C	Horizontal intake camshaft		1
16	779.5.030.2A	Screw		12
17	930.5.007.1A	Seal ring		4
18	148.2.309.1C	Vertical exhaust camshaft		1

CATALOGUE No: 915.1.290.1F
ISSUED: 10 - 11

DRAWING 014 Vertical cylinder head

1 Registro bilanc. apertura Adjustment Réglage Ventilkäppchen	2 Registro bilanc. chiusura Adjustment Réglage Ventilkäppchen
840.1.031.1A - 1,8	840.1.041.2B - 2,2
840.1.032.1A - 1,85	840.1.042.2B - 2,25
840.1.033.1A - 1,9	840.1.043.2B - 2,3
840.1.034.1A - 1,95	840.1.044.2B - 2,35
840.1.001.1A - 2,0	840.1.045.2B - 2,4
840.1.002.1A - 2,05	840.1.046.2B - 2,45
840.1.003.1A - 2,1	840.1.047.2B - 2,5
840.1.004.1A - 2,15	840.1.048.2B - 2,55
840.1.005.1A - 2,2	840.1.049.2B - 2,6
840.1.006.1A - 2,25	840.1.050.2B - 2,65
840.1.007.1A - 2,3	840.1.051.2B - 2,7
840.1.008.1A - 2,35	840.1.052.2B - 2,75
840.1.009.1A - 2,4	840.1.053.2B - 2,8
840.1.010.1A - 2,45	840.1.054.2B - 2,85
840.1.011.1A - 2,5	840.1.055.2B - 2,9
840.1.012.1A - 2,55	840.1.056.2B - 2,95
840.1.013.1A - 2,6	840.1.057.2B - 3,0
840.1.014.1A - 2,65	840.1.058.2B - 3,05
840.1.015.1A - 2,7	840.1.059.2B - 3,1
840.1.016.1A - 2,75	840.1.060.2B - 3,15
840.1.017.1A - 2,8	840.1.061.2B - 3,2
840.1.018.1A - 2,85	840.1.062.2B - 3,25
840.1.019.1A - 2,9	840.1.063.2B - 3,3
840.1.020.1A - 2,95	840.1.064.2B - 3,35
840.1.021.1A - 3,0	840.1.065.2B - 3,4
840.1.022.1A - 3,05	840.1.066.2B - 3,45
840.1.023.1A - 3,1	840.1.067.2B - 3,5
840.1.024.1A - 3,15	840.1.068.2B - 3,55
840.1.025.1A - 3,2	840.1.069.2B - 3,6
840.1.026.1A - 3,25	840.1.070.2B - 3,65
840.1.027.1A - 3,3	840.1.071.2B - 3,7
840.1.028.1A - 3,35	840.1.072.2B - 3,75
840.1.029.1A - 3,4	840.1.073.2B - 3,8
840.1.030.1A - 3,45	840.1.074.2B - 3,85
	840.1.075.2B - 3,9
	840.1.076.2B - 3,95
	840.1.077.2B - 4,0
	840.1.078.2B - 4,05
	840.1.079.2B - 4,1
	840.1.080.2B - 4,15
	840.1.081.2B - 4,2
	840.1.082.2B - 4,25
	840.1.083.2B - 4,3
	840.1.084.2B - 4,35
	840.1.085.2B - 4,4
	840.1.086.2B - 4,45
	840.1.087.2B - 4,5

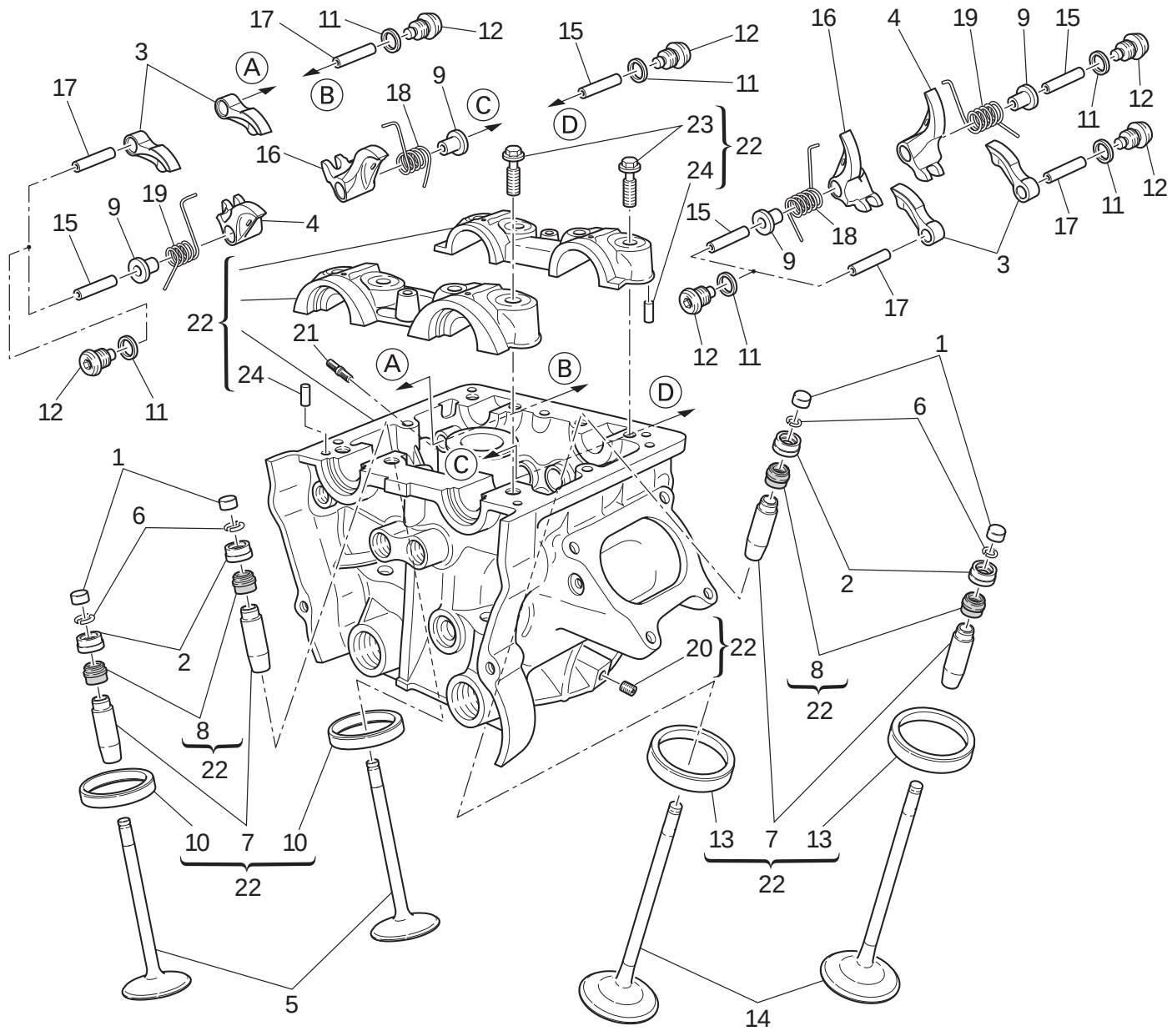

DRAWING 014 Vertical cylinder head

NOTES NO.	CODE NO.	DESCRIPTION	VALIDITY	Q.TY
1	.....	See table		4
2	.....	See table		4
3	208.1.032.1A	Opening rocker		4
4	209.1.050.1A	Closing rocker (L.H.)		2
5	211.1.070.1B	Exhaust valve		2
6	669.1.001.1E	Split rings		8
7	303.1.063.1BB	Oversize valve guide 0.03		4
7	303.1.063.1BC	Oversize valve guide 0.06		4
7	303.1.063.1BD	Oversize valve guide 0.09		4
8	764.1.087.1A	Valve seal		4
9	713.1.292.1A	Spacer		4
10	304.1.087.1A	Exhaust valve seat		2
10	304.1.087.1AB	Oversize exhaust valve seat 0.03		2
10	304.1.087.1AC	Oversize exhaust valve seat 0.06		2
11	852.5.026.1B	Aluminium gasket th.1,5		8
12	780.1.051.2A	Cap		8
13	304.1.086.1A	Intake valve seat		2
13	304.1.086.1AB	Oversize intake valve seat 0.03		2
13	304.1.086.1AC	Oversize intake valve seat 0.06		2
14	210.1.072.1A	Intake valve		2
15	821.1.223.1B	Closing rocker shaft		4
16	209.1.049.1A	Closing rocker (R.H.)		2
17	821.1.222.1B	Opening rocker shaft		4
18	799.1.486.1A	Valve return spring (R.H.)		2
19	799.1.485.1A	Valve return spring (L.H.)		2
20	417.6.011.3A	Threaded dowel		1
21	766.4.019.1A	Stud bolt		3
22	301.2.239.6BB	Complete vertical head		1
23	779.1.421.1A	Special screw		8
24	860.5.006.1A	Pin		4

CATALOGUE No: 915.1.290.1F
ISSUED: 10 - 11

CATALOGUE No: 915.1.290.1F
ISSUED: 10 - 11

DRAWING 015 Horizontal cylinder head

1 Registro bilanc. apertura Adjustment Réglage Ventilkäppchen	2 Registro bilanc. chiusura Adjustment Réglage Ventilkäppchen
840.1.031.1A - 1,8	840.1.041.2B - 2,2
840.1.032.1A - 1,85	840.1.042.2B - 2,25
840.1.033.1A - 1,9	840.1.043.2B - 2,3
840.1.034.1A - 1,95	840.1.044.2B - 2,35
840.1.001.1A - 2,0	840.1.045.2B - 2,4
840.1.002.1A - 2,05	840.1.046.2B - 2,45
840.1.003.1A - 2,1	840.1.047.2B - 2,5
840.1.004.1A - 2,15	840.1.048.2B - 2,55
840.1.005.1A - 2,2	840.1.049.2B - 2,6
840.1.006.1A - 2,25	840.1.050.2B - 2,65
840.1.007.1A - 2,3	840.1.051.2B - 2,7
840.1.008.1A - 2,35	840.1.052.2B - 2,75
840.1.009.1A - 2,4	840.1.053.2B - 2,8
840.1.010.1A - 2,45	840.1.054.2B - 2,85
840.1.011.1A - 2,5	840.1.055.2B - 2,9
840.1.012.1A - 2,55	840.1.056.2B - 2,95
840.1.013.1A - 2,6	840.1.057.2B - 3,0
840.1.014.1A - 2,65	840.1.058.2B - 3,05
840.1.015.1A - 2,7	840.1.059.2B - 3,1
840.1.016.1A - 2,75	840.1.060.2B - 3,15
840.1.017.1A - 2,8	840.1.061.2B - 3,2
840.1.018.1A - 2,85	840.1.062.2B - 3,25
840.1.019.1A - 2,9	840.1.063.2B - 3,3
840.1.020.1A - 2,95	840.1.064.2B - 3,35
840.1.021.1A - 3,0	840.1.065.2B - 3,4
840.1.022.1A - 3,05	840.1.066.2B - 3,45
840.1.023.1A - 3,1	840.1.067.2B - 3,5
840.1.024.1A - 3,15	840.1.068.2B - 3,55
840.1.025.1A - 3,2	840.1.069.2B - 3,6
840.1.026.1A - 3,25	840.1.070.2B - 3,65
840.1.027.1A - 3,3	840.1.071.2B - 3,7
840.1.028.1A - 3,35	840.1.072.2B - 3,75
840.1.029.1A - 3,4	840.1.073.2B - 3,8
840.1.030.1A - 3,45	840.1.074.2B - 3,85
	840.1.075.2B - 3,9
	840.1.076.2B - 3,95
	840.1.077.2B - 4,0
	840.1.078.2B - 4,05
	840.1.079.2B - 4,1
	840.1.080.2B - 4,15
	840.1.081.2B - 4,2
	840.1.082.2B - 4,25
	840.1.083.2B - 4,3
	840.1.084.2B - 4,35
	840.1.085.2B - 4,4
	840.1.086.2B - 4,45
	840.1.087.2B - 4,5

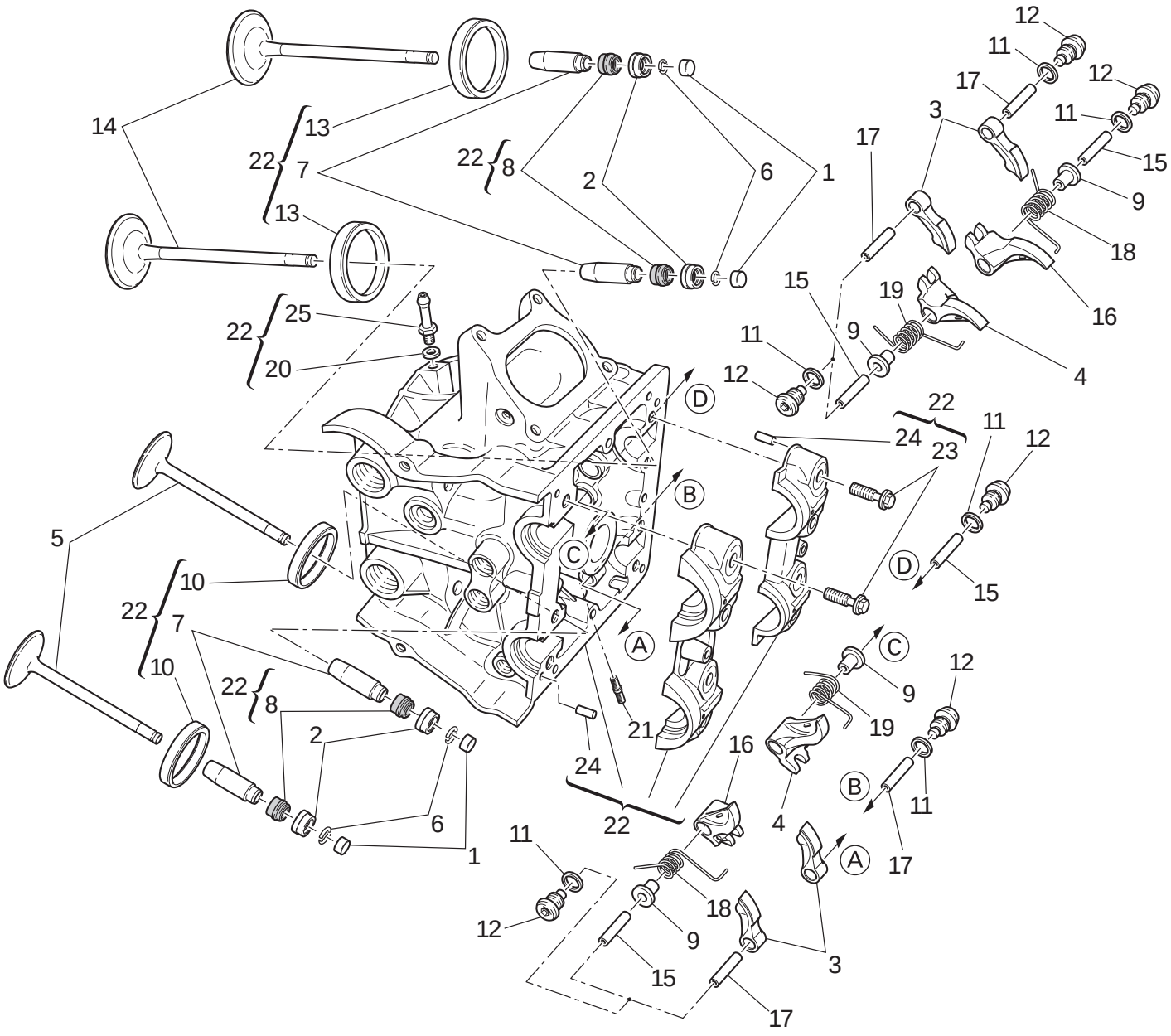

DRAWING 015 Horizontal cylinder head

NOTES NO.	CODE NO.	DESCRIPTION	VALIDITY	Q.TY
1	.....	See table		4
2	.....	See table		4
3	208.1032.1A	Opening rocker		4
4	209.1050.1A	Closing rocker (L.H.)		2
5	211.1070.1B	Exhaust valve		2
6	669.1001.1E	Split rings		8
7	303.1063.1BB	Oversize valve guide 0.03		4
7	303.1063.1BC	Oversize valve guide 0.06		4
7	303.1063.1BD	Oversize valve guide 0.09		4
8	764.1087.1A	Valve seal		4
9	713.1292.1A	Spacer		4
10	304.1087.1A	Exhaust valve seat		2
10	304.1087.1AB	Oversize exhaust valve seat 0.03		2
10	304.1087.1AC	Oversize exhaust valve seat 0.06		2
11	852.5.026.1B	Aluminium gasket th.1,5		8
12	780.1051.2A	Cap		8
13	304.1086.1A	Intake valve seat		2
13	304.1086.1AB	Oversize intake valve seat 0.03		2
13	304.1086.1AC	Oversize intake valve seat 0.06		2
14	210.1072.1A	Intake valve		2
15	821.1223.1B	Closing rocker shaft		4
16	209.1049.1A	Closing rocker (R.H.)		2
17	821.1222.1B	Opening rocker shaft		4
18	799.1486.1A	Valve return spring (R.H.)		2
19	799.1485.1A	Valve return spring (L.H.)		2
20	852.5.023.1A	Gasket		1
21	766.4.019.1A	Stud bolt		3
22	301.2.238.6BB	Complete horizontal head		1
23	779.1421.1A	Special screw		8
24	860.5.006.1A	Pin		4
25	814.1188.1A	Union		1

CATALOGUE No: 915.1290.1F
ISSUED: 10 - 11

DRAWING 016 Heat exchanger

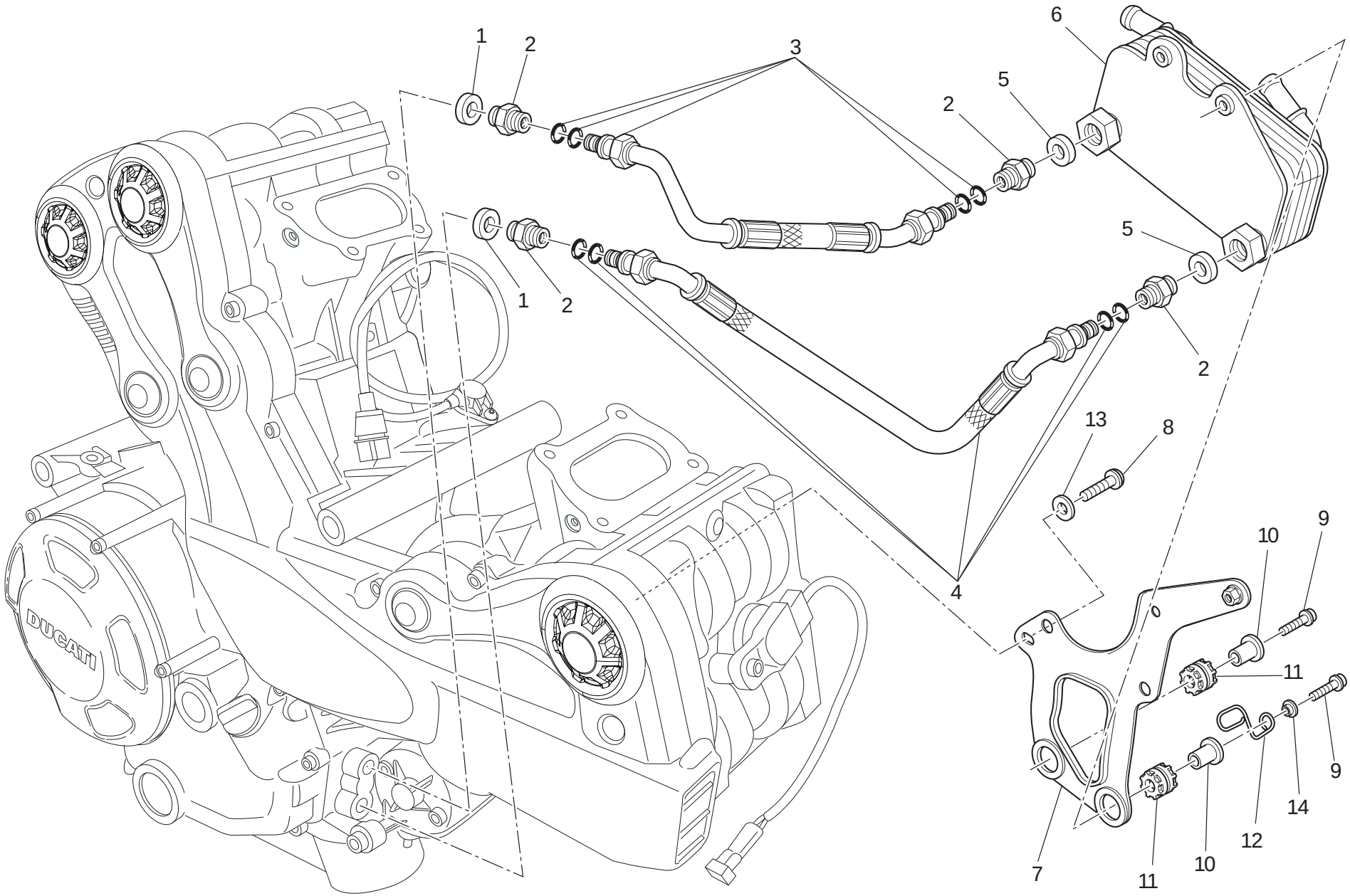

DRAWING 016 Heat exchanger

NOTES NO.	CODE NO.	DESCRIPTION	VALIDITY	Q.TY
1	787.1011.1A	Aluminium gasket th.2		2
2	815.1022.1A	Nipple		4
3	549.1090.1A	Oil delivery pipe		1
4	549.1091.1A	Oil return pipe		1
5	420.2.006.4A	Aluminium gasket		2
6	547.1001.1A	Heat exchanger		1
7	830.1530.1A	Bracket		1
8	772.1089.3B	Screw		2
9	7715.668.8B	Screw		2
10	716.1003.1A	Spacer		2
11	764.1022.1A	Vibration damper pad		2
12	881.1058.1A	Cable guide		1
13	852.1176.1A	Washer		1
14	716.1412.1A	Spacer		1

NOTES NO.	CODE NO.	DESCRIPTION	VALIDITY	Q.TY

CATALOGUE No: 915.1290.1F
ISSUED: 10 - 11

DRAWING 017 Throttle body

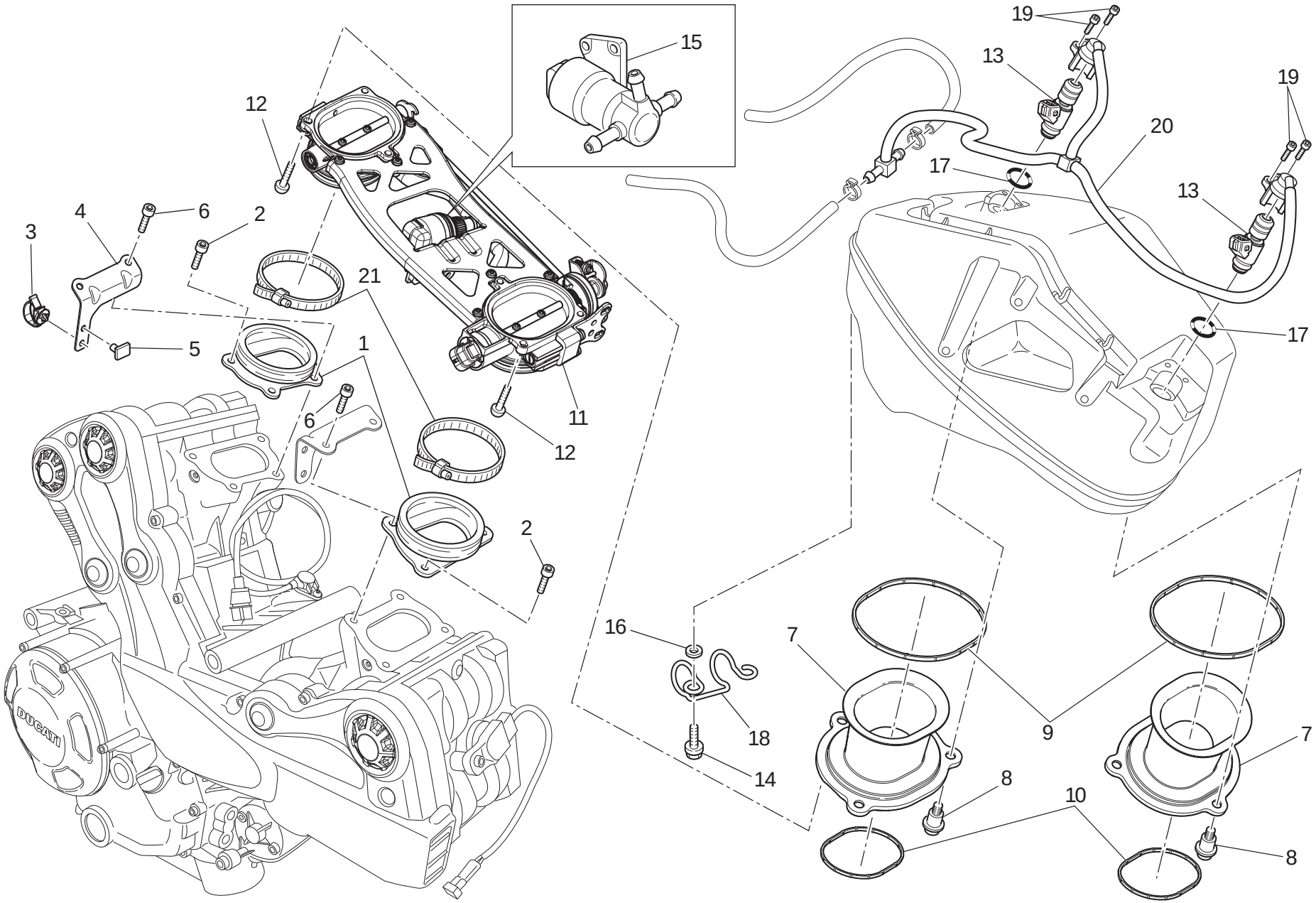

DRAWING 017 Throttle body

NOTES NO.	CODE NO.	DESCRIPTION	VALIDITY	Q.TY
1	140.1.048.1B	Intake manifold		2
2	771.5.065.8B	Screw		4
3	758.4.017.1A	Clamp		1
4	827.1.543.1A	Cable keep plate		1
5	850.4.043.1A	Quik fastening		1
6	771.1.233.1A	Screw		4
7	135.1.023.2A	Intake duct		2
8	772.1.085.2A	Special screw		6
9	788.1.096.2A	Gasket		2
10	788.1.097.2A	Gasket		2
11	282.4.079.3B	Complete throttle body		1
12	775.1.017.1C	Screw		6
13	280.4.016.1A	Injector		2
14	772.1.110.1A	Screw		2
15	283.4.024.1A	Stepper motor		1
16	852.4.013.1A	Washer		2
17	886.4.089.1A	O-ring		2
18	758.1.039.2A	Hose guide		1
19	773.1.005.1A	Screw		4
20	590.2.025.4A	Complete pipe set		1
21	741.4.189.1A	Clamp		2

NOTES NO.	CODE NO.	DESCRIPTION	VALIDITY	Q.TY

CATALOGUE No: 915.1.290.1F
ISSUED: 10 - 11

DRAWING 018 Battery support

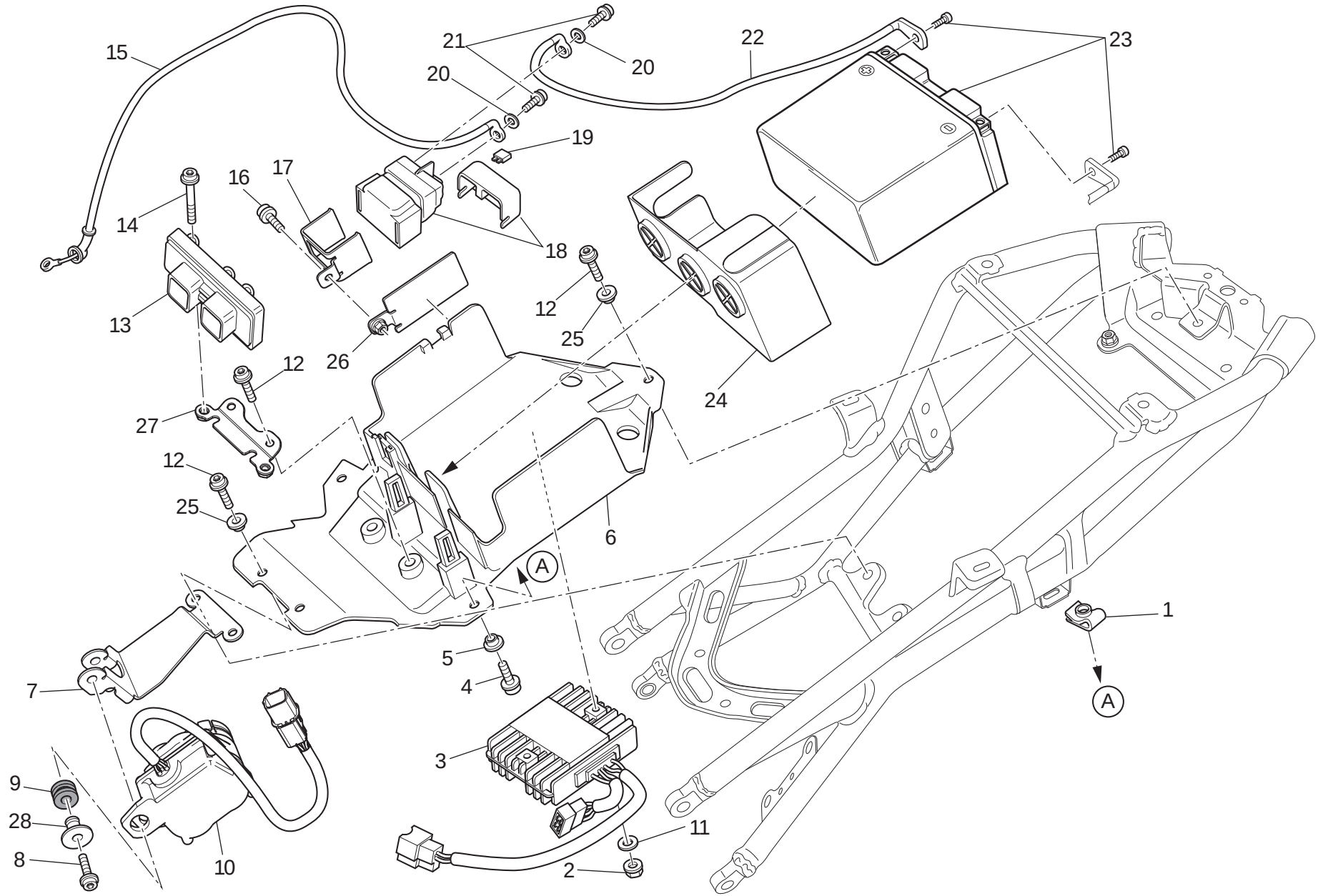

DRAWING 018 Battery support

NOTES NO.		CODE NO.	DESCRIPTION	VALIDITY	Q.TY
	1	850.4.055.1A	Nut with clip		2
	2	750.5.001.1B	Nut		2
	3	540.4.019.1A	Regulator		1
	4	7715.639.8B	Screw		2
	5	716.1.144.1A	Spacer		2
	6	829.1.985.3A	Battery box mount		1
	7	829.1.A68.2AA	Bracket		1
	8	7715.645.8B	Screw		2
	9	764.1.130.1B	Rubber pad		2
	10	593.4.039.2A	Exhaust valve engine		1
	11	852.1.160.1B	Washer		2
	12	771.1.369.1A	Screw		5
USA	13	286.4.186.1C	Injection control unit		1
CDN	13	286.4.186.1D	Injection control unit		1
	14	7715.672.8B	Screw		2
	15	514.1.062.1A	Solenoid starter - starter motor cable		1
	16	772.1.046.1B	Screw		1
	17	830.1.549.1A	Plate		1
	18	397.4.007.1A	Remote switch		1
	19	389.4.025.1A	Fuse 30A		1
	20	853.5.010.1A	Spring washer		2
	21	7715.662.8B	Screw		2
	22	514.1.063.1A	Battery - solenoid starter cable		1
	23	395.2.013.1C	Battery		1
	24	866.1.098.1A	Battery carpet		1
	25	716.1.401.1A	Spacer		3
	26	830.1.550.1A	Plate		1
	27	830.1.556.1A	Holder		1
	28	716.1.428.1A	Spacer		2

CATALOGUE No: 915.1.290.1F
ISSUED: 10 - 11

DRAWING 018a Electrical system

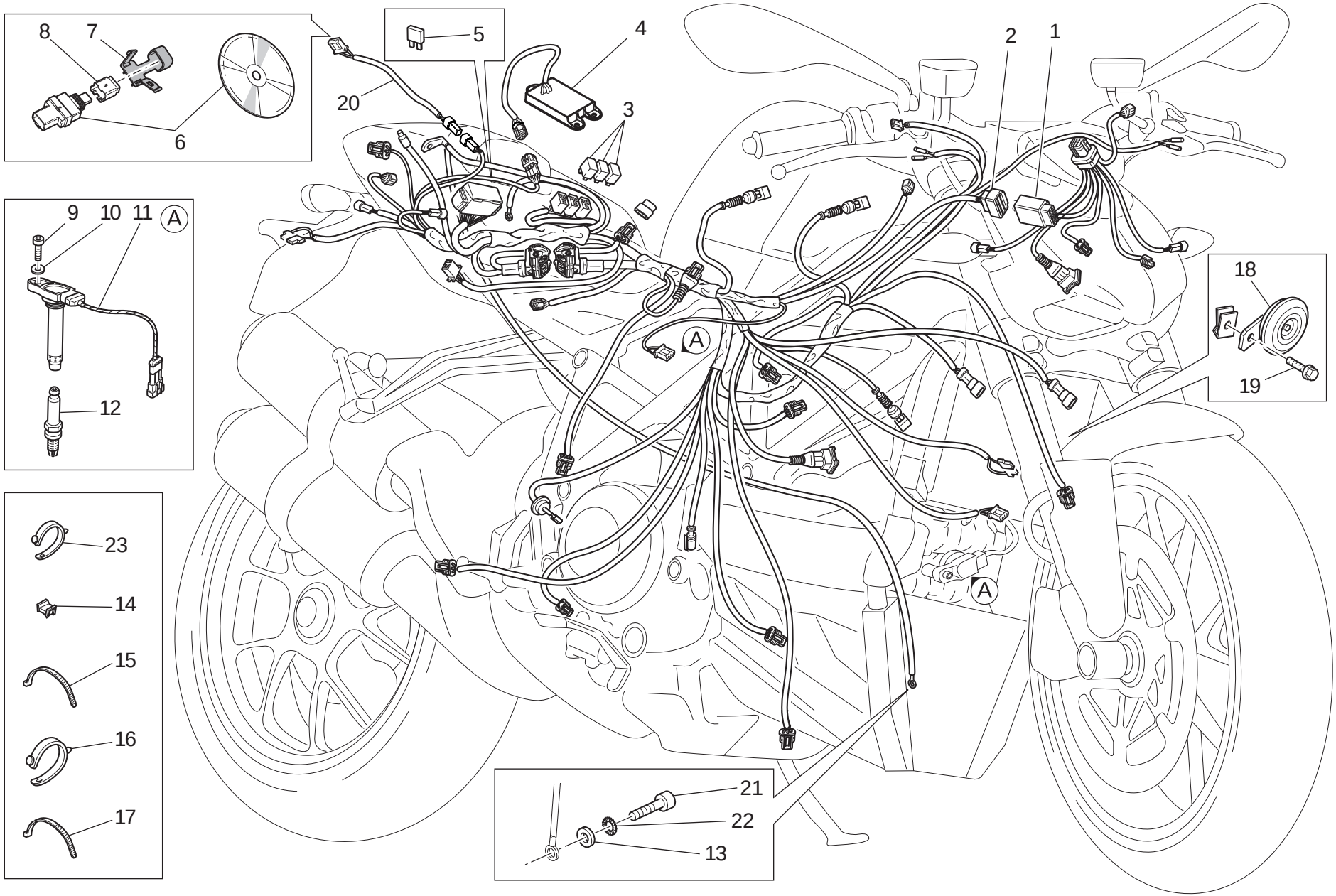

DRAWING 018a Electrical system

NOTES NO.	CODE NO.	DESCRIPTION	VALIDITY	Q.TY
1	510.1.694.1C	Electric wiring		1
2	510.1.776.1A	Electric wiring		1
3	541.4.010.1A	Relay		3
4	286.1.117.1E	DTC unit		1
5	389.4.019.1A	Fuse 5A		2
5	389.4.020.1A	Fuse 10A		1
5	389.4.021.1A	Fuse 15A		1
5	389.4.022.1A	Fuse 20A		1
5	389.4.024.1A	Fuse 7.5A		1
6	286.2.040.1B	Data acquisition kit		1
7	741.1.040.1A	Clamp		1
8	872.1.053.1A	Cap (DDA)		1
9	771.5.066.3B	Screw		2
10	852.1.264.1A	Washer		2
11	380.1.014.5B	Coil		2
12	670.4.038.1A	Spark plug		2
13	853.5.009.1A	Spring washer		1
14	850.4.067.1A	Clamp		11
15	741.4.038.1A	Hose guide		19
16	8000.53724	Hose guide		10
17	069.191.030	Hose guide		23
18	516.4.004.2B	Horn		1
19	772.1.050.1C	Screw		1
20	510.1.570.1A	Data acquisition cable		1
21	771.1.229.1A	Screw		1
22	855.5.000.1B	Spring washer		1
23	741.1.012.1A	Hose guide		6

CATALOGUE No: 915.1.290.1F
ISSUED: 10 - 11

DRAWING 019 Exhaust system

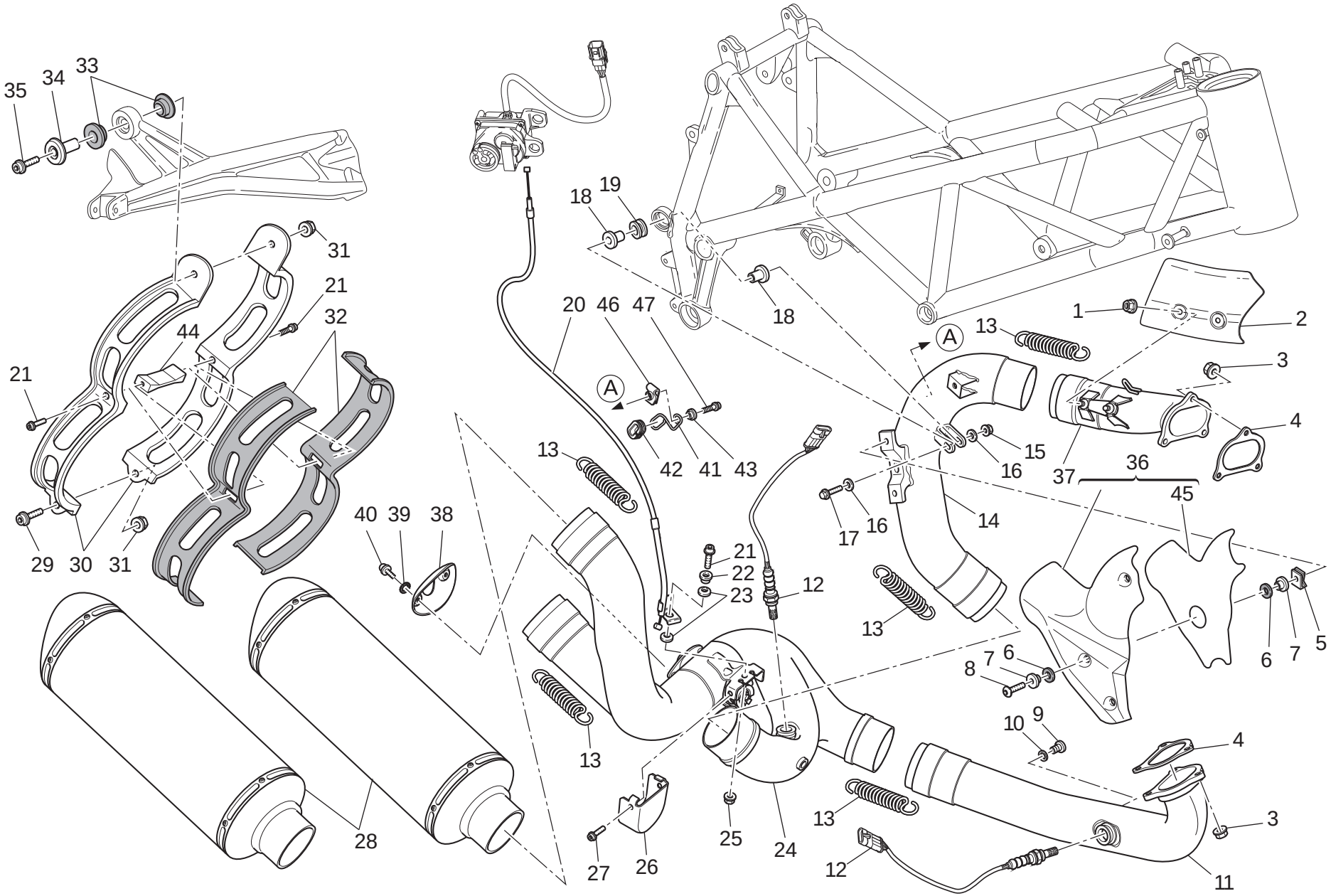

DRAWING 019 Exhaust system

NOTES NO.	CODE NO.	DESCRIPTION	VALIDITY	Q.TY
1	748.1.036.1A	Nut		2
2	460.1.286.2B	Heat guard		1
3	748.1.024.1A	Nut		6
4	790.1.015.1A	Exhaust gasket		2
5	850.4.158.1A	Nut with clip		3
6	852.1.072.1A	Washer		6
7	716.1.422.1A	Spacer		6
8	772.1.089.3B	Screw		3
9	780.1.007.1A	Cap		2
10	852.5.024.1A	Gasket th.1		2
11	570.1.259.1B	Horizontal head exhaust pipe		1
12	552.1.111.1A	Lambda sensor		2
13	799.1.263.2A	Spring		5
14	571.1.260.2A	Vertical head exhaust pipe		1
15	749.4.031.1A	Nut		1
16	852.1.186.1A	Washer		2
17	772.5.038.1AB	Screw		1
18	716.1.414.1A	Spacer		2
19	764.1.064.1A	Vibration damper pad		1
20	732.2.028.1A	Cables unit		1
21	771.5.640.8B	Screw		3
22	716.1.144.1A	Spacer		1
23	799.4.009.1A	Spring washer		2
24	570.1.274.1C	Centre exhaust pipe		1
25	748.1.035.1B	Nut		1
26	460.1.293.1A	Protection		1
27	771.5.661.8B	Screw		2
28	573.1.116.1B	Silencer		2
29	771.5.725.8B	Screw		1
30	741.1.047.1A	Clamp		2
31	749.4.112.8B	Nut		2
32	788.1.083.1A	Clamp gasket		2
33	764.1.001.1A	Rubber pad		2
34	713.1.436.1A	Bush		1
35	773.5.506.8B	Screw		1
36	460.2.359.1A	Heat guard		1
37	160.1.367.4A	Exhaust manifold (vertical)		1
38	460.1.275.1A	Protection		1
39	462.4.046.1A	Spring washer		2
40	772.4.025.3C	Screw		2
41	881.1.078.1A	Cable guide		1
42	764.1.105.1A	Rubber pad		1
43	716.1.412.1A	Spacer		1
44	741.1.048.2A	Spacer		1
45	460.1.405.1A	Heat-reflecting protection		1
46	850.4.038.1A	Nut with clip		1
47	771.5.663.8B	Screw		1

CATALOGUE No: 915.1.290.1F
ISSUED: 10 - 11

DRAWING 020 Headlight & instr. panel

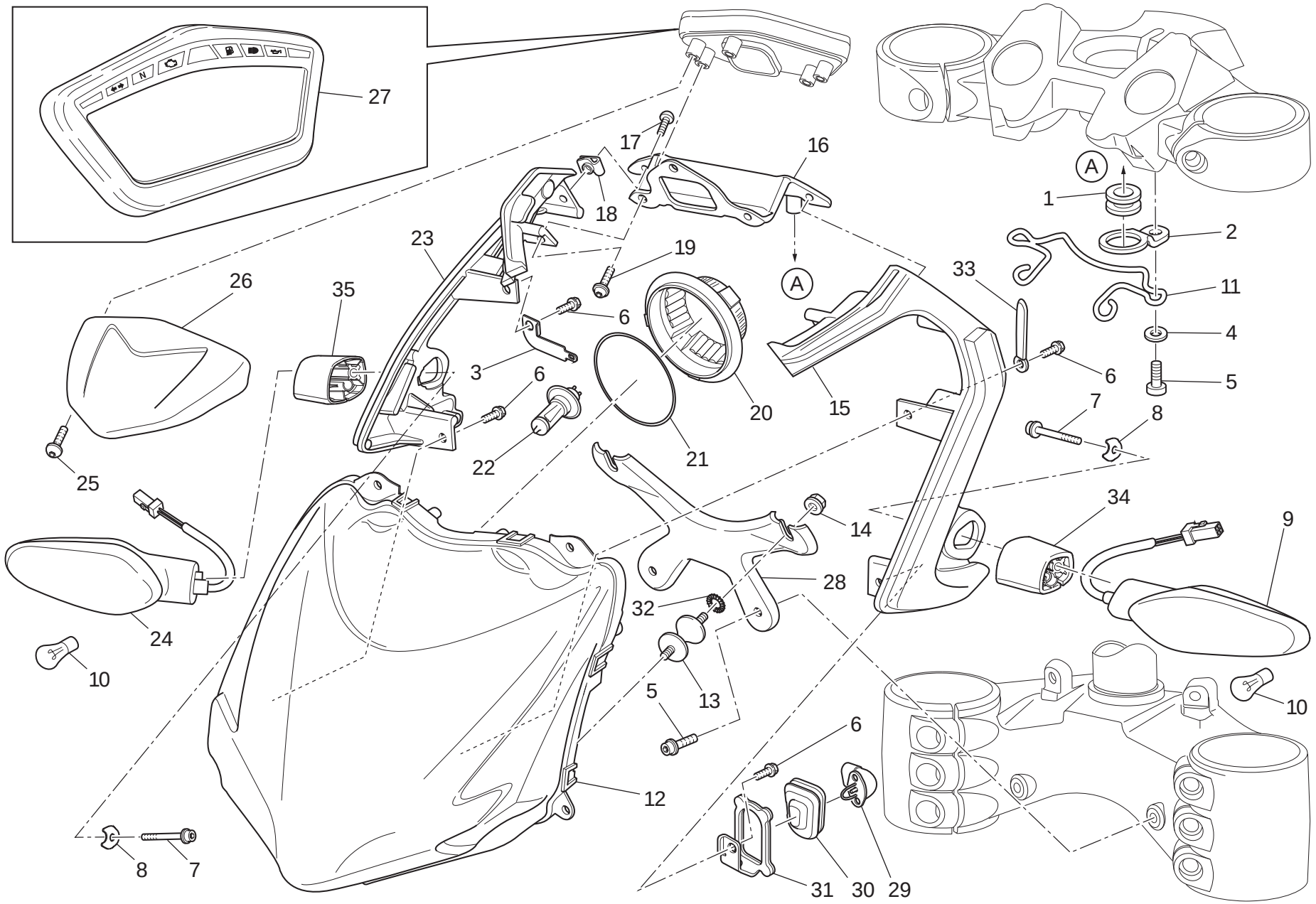

DRAWING 020 Headlight & instr. panel

NOTES NO.	CODE NO.	DESCRIPTION	VALIDITY	Q.TY
1	764.1.064.1A	Vibration damper pad		2
2	830.1.416.1A	Headlight holder (upper)		2
3	827.1.544.1A	Connector holder		1
4	852.1.176.1A	Washer		2
5	771.1.039.1A	Screw		2
6	772.1.061.1A	Screw		4
7	771.5.651.8B	Screw		2
8	827.1.493.1A	Plate		2
9	530.1.022.4A	Turn indicator (front) (L.H.)		1
10	390.4.021.1A	Bulb 12V-10W RY10W		2
11	758.1.032.1A	Fairlead		1
12	520.1.018.2A	Headlight (front)		1
13	700.1.048.1B	Vibration damper		2
14	750.5.001.1B	Nut		2
15	829.1.982.1A	Headlight holder (L.H.)		1
16	829.1.974.1A	Headlight holder (centre)		1
17	775.1.033.1A	Screw		2
18	850.4.047.1A	Nut with clip		2
19	774.4.004.1A	Screw		3
20	390.4.026.1A	Cap		1
21	390.4.027.1A	Gasket		1
22	390.4.029.1A	Bulb		1
23	829.1.983.1A	Headlight holder (R.H.)		1
24	530.1.023.4A	Turn indicator (front) (R.H.)		1
25	775.5.001.3C	Screw		2
26	247.1.335.1A	Instrument panel cover		1
27	406.1.097.1A	Instrument panel		1
28	830.1.411.1A	Headlight holder (bottom)		1
29	552.4.012.1A	Air temperature sensor		1
30	764.1.097.1A	Rubber pad		1
31	827.1.538.1A	Holder sensor		1
32	855.5.000.1B	Spring washer		2
33	741.4.193.1A	Clamp		1
34	713.1.459.2A	Spacer (L.H.)		1
35	713.1.458.2A	Spacer (R.H.)		1

CATALOGUE No: 915.1.290.1F
ISSUED: 10 - 11

DRAWING 021 Handlebar and controls

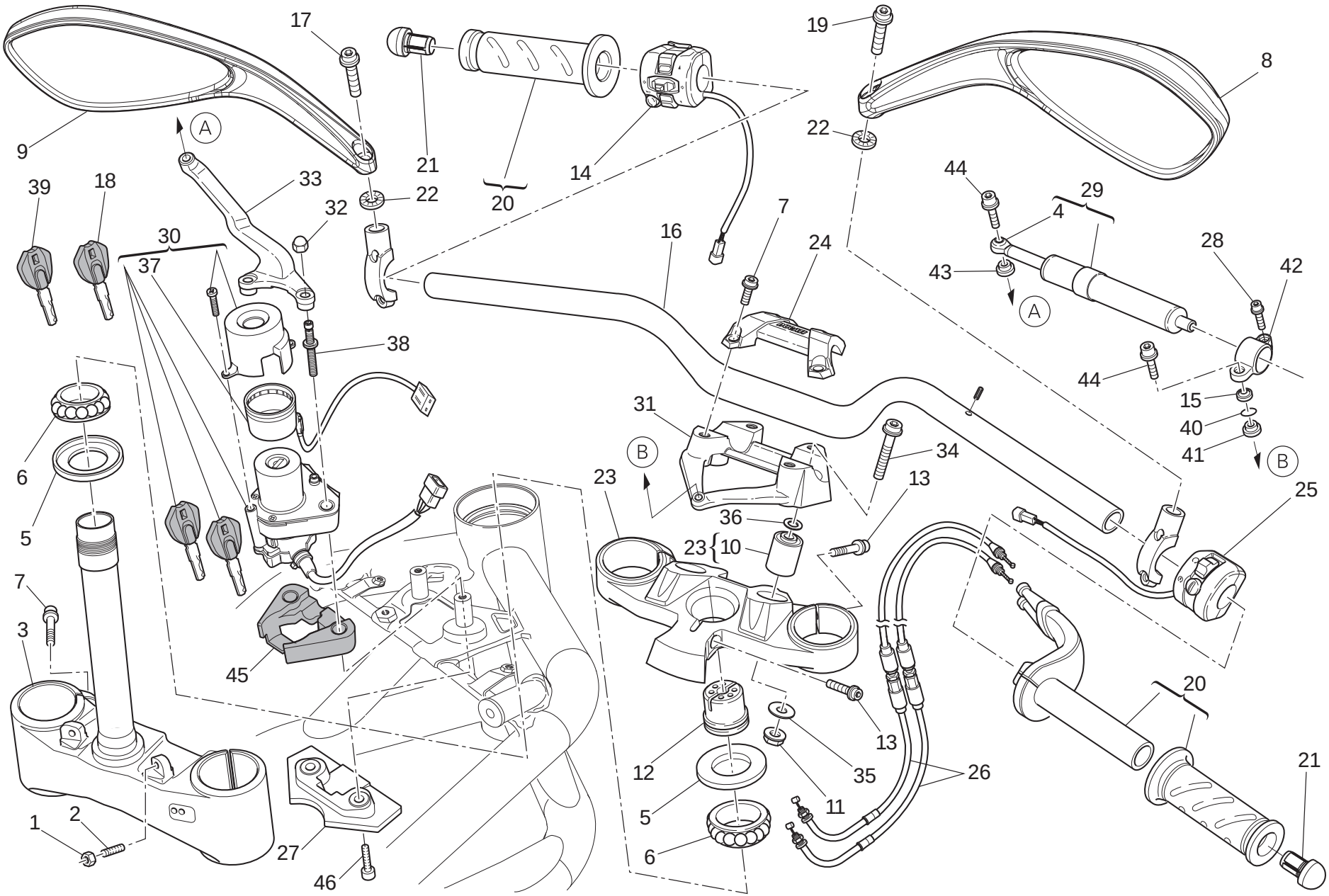

DRAWING 021 Handlebar and controls

NOTES NO.	CODE NO.	DESCRIPTION	VALIDITY	Q.TY
1	747.5.003.1A	Nut		2
2	779.1.298.1A	Special screw		2
3	342.2.057.1A	Steering head base with pin		1
4	848.2.002.1A	Joint		1
5	930.1.004.1B	Seal ring		2
6	702.4.123.1A	Bearing		2
7	771.5.725.8B	Screw		10
8	523.4.022.2A	Rear-view mirror (R.H.)		1
9	523.4.023.2A	Rear-view mirror (L.H.)		1
10	700.1.054.1A	Vibration damper		2
11	748.4.024.1AB	Nut		2
12	703.1.013.1A	Ring nut		1
13	771.5.727.8B	Screw		3
14	651.1.011.2C	Switch (L.H.)		1
15	848.4.001.1A	Ball joint		1
16	360.1.136.1AA	Handlebar		1
17	771.1.374.1A	Screw		1
18	598.4.029.1A	Wrench without Transponder		1
19	771.1.373.1A	Screw (L.H.)		1
20	654.2.016.1A	Throttle control		1
21	872.1.058.1A	Cap		2
22	851.4.006.1A	Spring washer		2
23	341.2.071.1A	Steering head		1
24	360.1.102.1A	Single U-bolt (upper)		1
25	650.1.009.2I	Switch (R.H.)		1
26	656.2.097.1A	Cables unit		1
27	700.1.063.1A	Vibration damper		1
28	771.1.039.1A	Screw		1
29	364.2.009.1A	Steering damper		1
30	652.4.021.1A	Switch		1
31	360.1.100.1A	Single U-bolt (bottom)		1
32	749.4.002.1A	Nut		2
33	830.1.527.1A	Holder		1
34	771.5.940.8B	Screw		2
35	852.1.049.1B	Washer		2
36	852.5.040.1A	Washer		2
37	518.4.005.1B	Antenna		1
38	779.1.591.1A	Special screw		2
39	598.4.034.1A	Wrench with Transponder		1
40	886.5.014.1A	O-ring		1
41	713.1.210.1A	Spacer		1
42	808.1.118.1A	Clamp		1
43	716.1.412.1A	Spacer		1
44	771.1.046.1A	Screw		2
45	866.1.116.1A	Pad		1
46	773.1.002.1A	Screw		2

CATALOGUE No: 915.1.290.1F
ISSUED: 10 - 11

DRAWING 021a Front forks

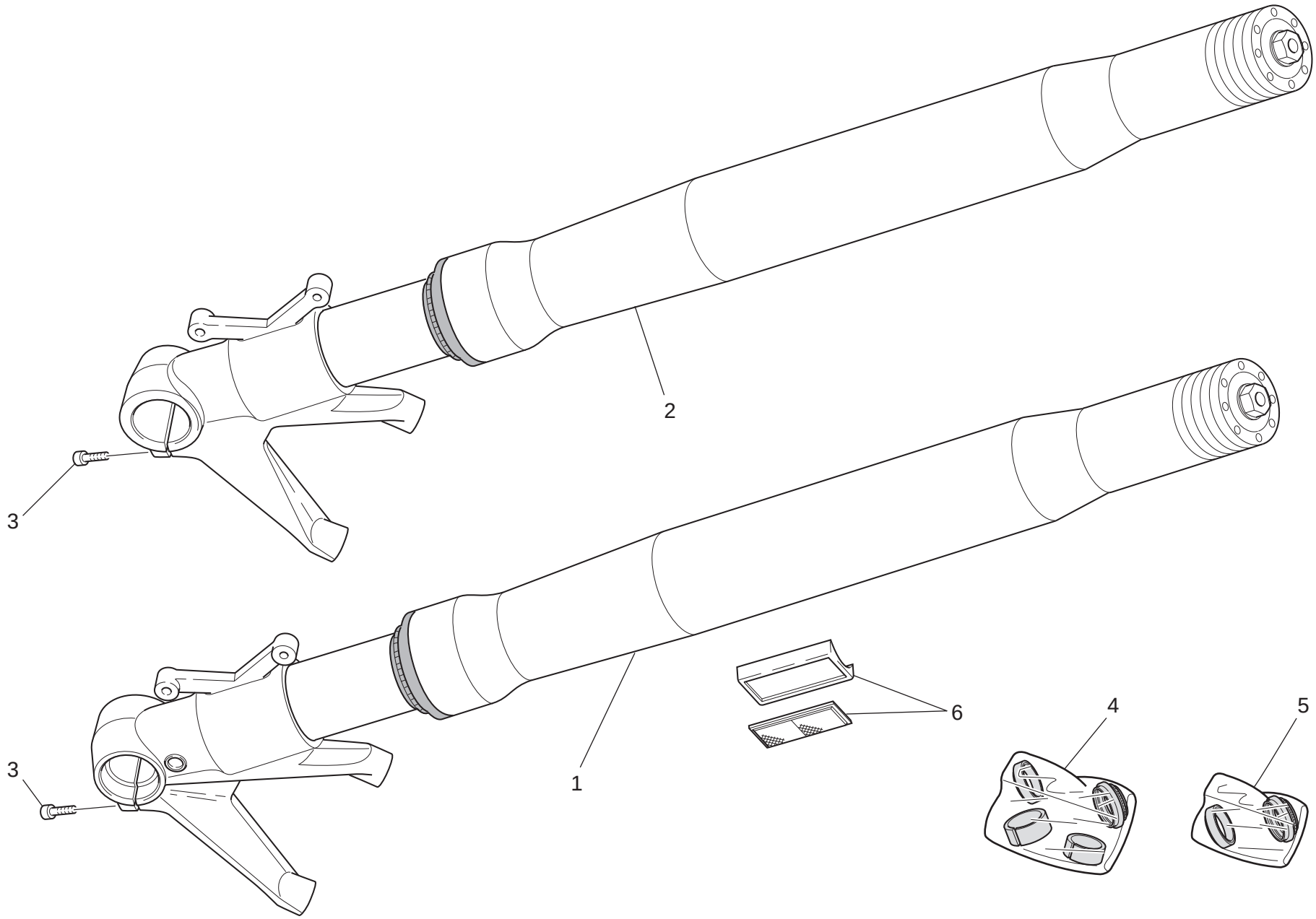

DRAWING 021a Front forks

NOTES NO.	CODE NO.	DESCRIPTION	VALIDITY	Q.TY
1	344.2.017.1B	L.H. fork leg assembly (OHLINS)		1
2	345.2.017.1B	R.H. fork leg assembly (OHLINS)		1
3	771.5.727.8B	Screw		4
4	349.2.039.1A	Overhaul kit (OHLINS)		2
5	349.2.040.1A	Seal kit (OHLINS)		2
6	529.1.001.2A	Cat's eye (AMBER)		2

NOTES NO.	CODE NO.	DESCRIPTION	VALIDITY	Q.TY

CATALOGUE No: 915.1.290.1F
ISSUED: 10 - 11

DRAWING 022 Frame

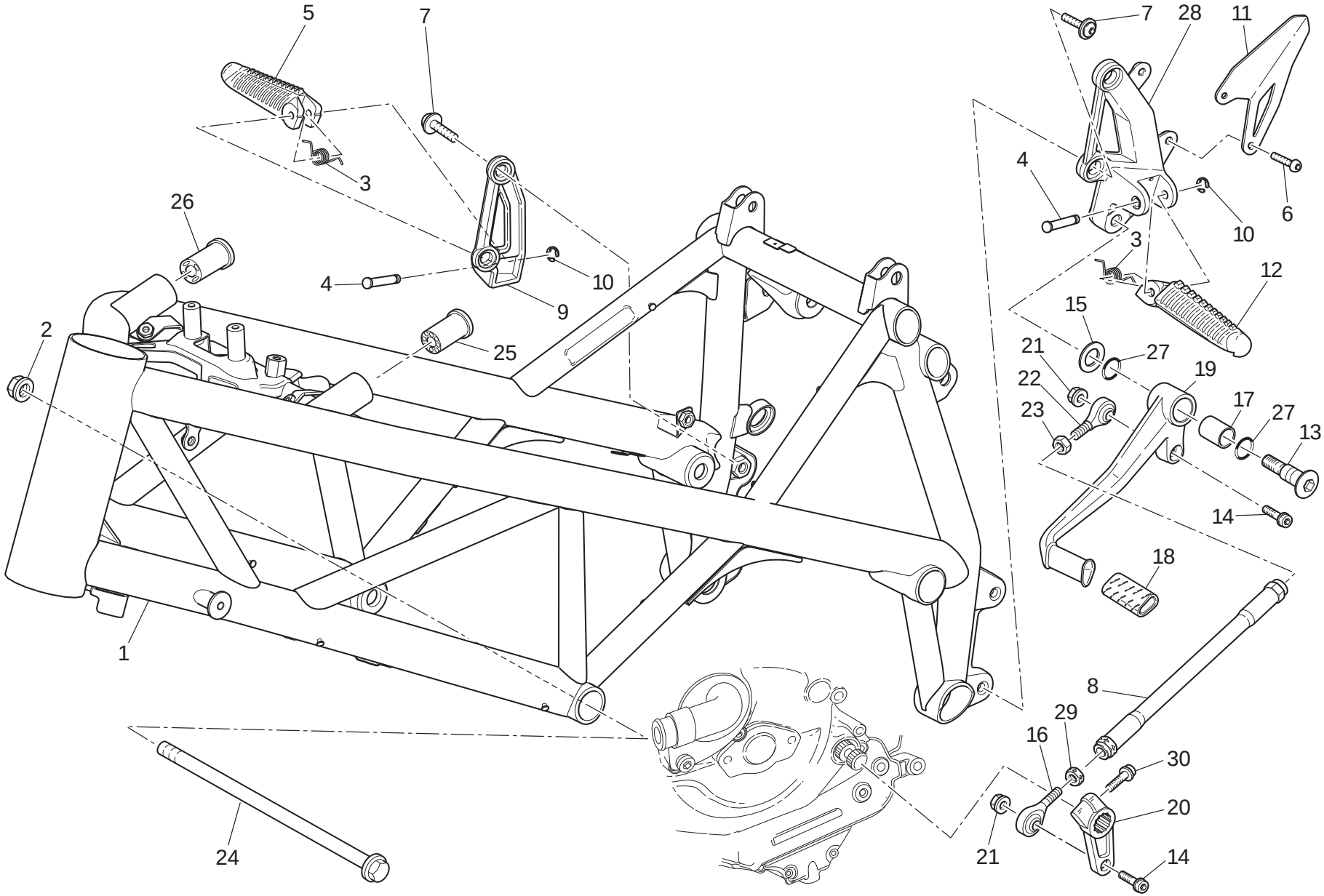

DRAWING 022 Frame

NOTES NO.	CODE NO.	DESCRIPTION	VALIDITY	Q.TY
1	470.1.213.2AA	Frame (RED)		1
2	748.4.002.1A	Nut		2
3	799.1.166.1B	Spring		2
4	821.1.051.1AB	Pin		2
5	464.1.056.1A	Foot peg (front) (R.H.)		1
6	775.1.051.1B	Screw		2
7	772.1.077.2AB	Screw		4
8	117.1.088.2A	Gearbox transmission rod		1
9	824.1.155.1A	Foot peg holder plate (front) (R.H.)		1
10	884.5.003.1A	Circlip		2
11	460.1.331.1A	Heel guard (front) (L.H.)		1
12	464.1.055.1A	Foot peg (front) (L.H.)		1
13	821.1.170.1B	Pin		1
14	771.5.667.8B	Screw		2
15	852.1.151.1A	Washer		1
16	848.5.001.1A	Ball joint		1
17	712.1.034.1A	Bush		1
18	764.1.011.2A	Rubber pad		1
19	456.1.203.1A	Gearchange lever		1
20	456.1.046.1B	Gearchange control lever		1
21	749.4.004.1A	Nut		2
22	848.5.002.1A	Ball joint		1
23	747.5.010.1A	Nut		1
24	779.1.484.2B	Special screw		2
25	764.1.051.1A	Rubber pad		1
26	764.1.050.1A	Rubber pad		1
27	886.4.116.1A	O-ring		2
28	824.1.154.1A	Foot peg holder plate (front) (L.H.)		1
29	747.5.001.1AB	Nut (L.H.)		1
30	771.1.019.1A	Screw		1

CATALOGUE No: 915.1.290.1F
ISSUED: 10 - 11

DRAWING 022a Stand

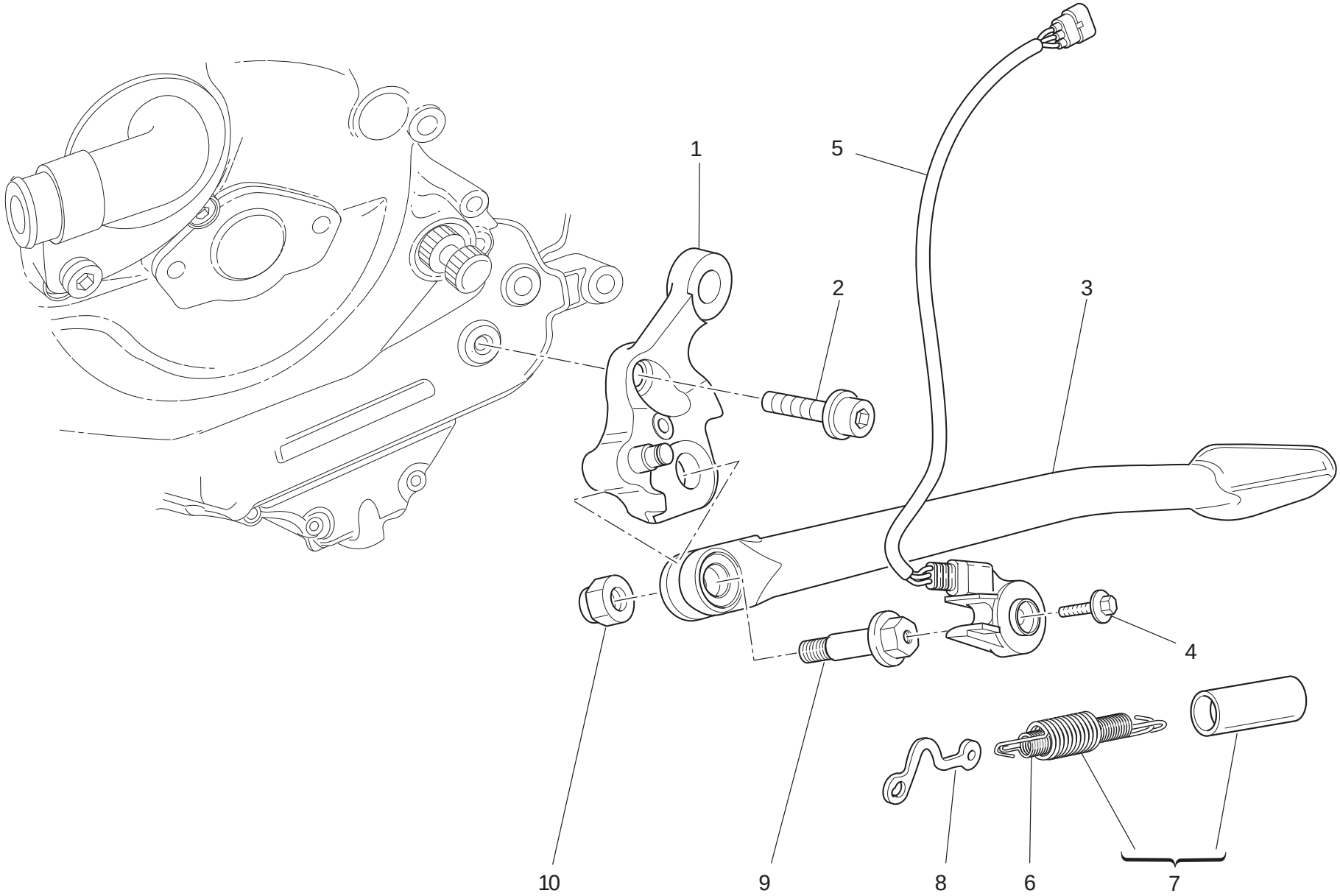

DRAWING 022a Stand

NOTES NO.	CODE NO.	DESCRIPTION	VALIDITY	Q.TY
1	556.2.063.1AA	Plate		1
2	771.1043.1A	Screw		2
3	556.1062.1AB	Side stand (BLACK)		1
4	779.4.005.2A	Screw		1
5	539.1030.1A	Stand switch		1
6	799.1158.1B	Inner spring		1
7	799.2.159.1B	Complete spring		1
8	829.1260.2A	Plate		1
9	821.1103.2A	Pivot		1
10	750.1048.1A	Nut		1

NOTES NO.	CODE NO.	DESCRIPTION	VALIDITY	Q.TY

CATALOGUE No: 915.1290.1F
ISSUED: 10 - 11

DRAWING 023 Clutch control

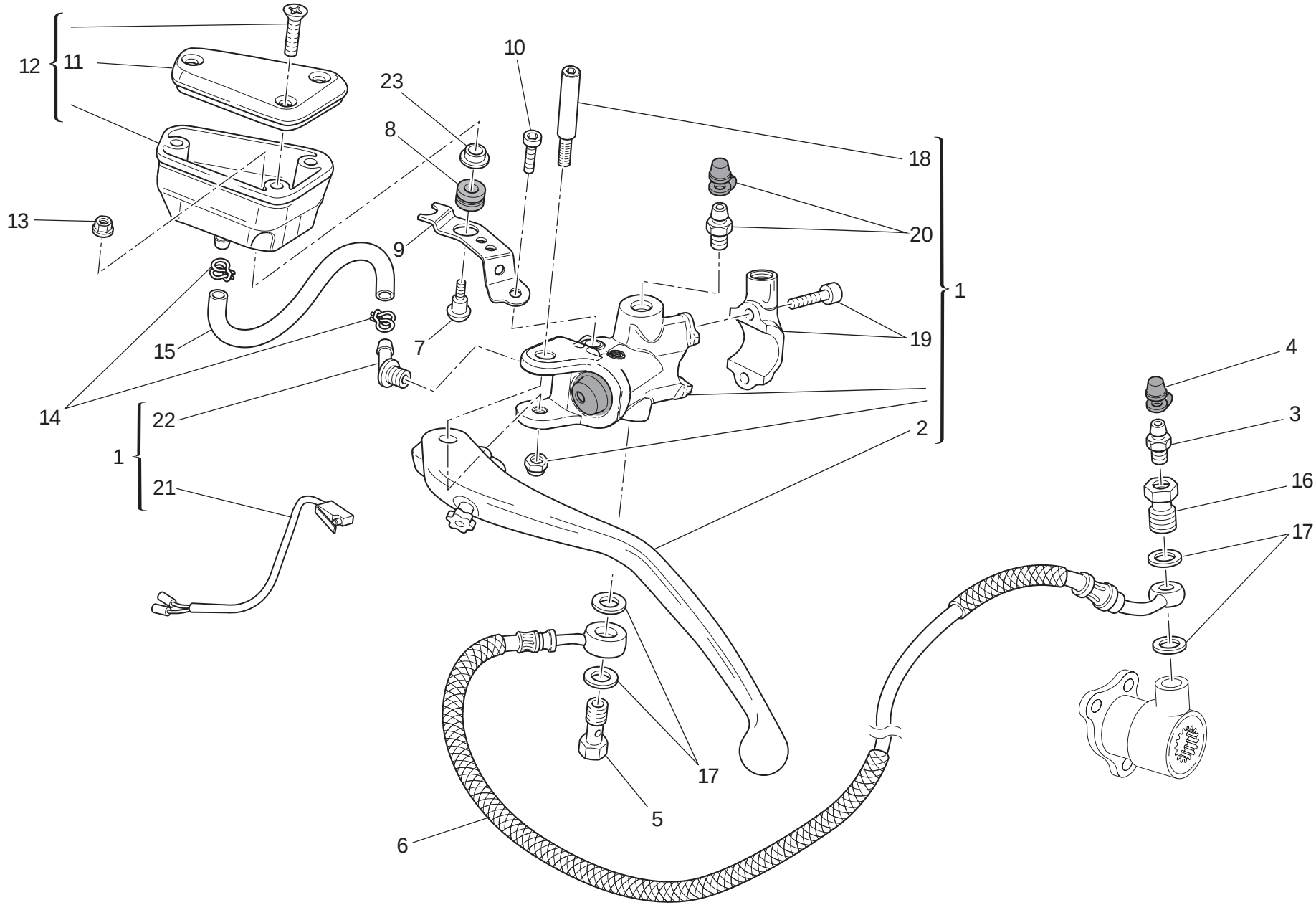

DRAWING 023 Clutch control

NOTES NO.	CODE NO.	DESCRIPTION	VALIDITY	Q.TY
1	630.4.048.2A	Clutch drive pump		1
2	631.4.034.1A	Clutch control lever		1
3	187.1.002.1A	Bleed		1
4	612.4.005.1A	Dust seal		1
5	779.1.397.1A	Special screw		1
6	632.4.054.1A	Clutch control pipe (METAL PLAITED)		1
7	779.1.092.1A	Screw		1
8	0370.72.020	Vibration damper pad		1
9	829.1.978.1A	Bracket		1
10	773.5.062.3B	Screw		1
11	893.4.008.1A	Cap		1
12	585.4.010.1A	Complete oil tank		1
13	8000.56443	Nut		1
14	741.4.043.1A	Hose guide		2
15	877.1.138.1A	Tube		1
16	779.1.366.1AB	Special screw		1
17	852.5.024.1A	Gasket th.1		4
18	626.4.056.1A	Pin		1
19	626.4.066.1A	Spare bracket		1
20	631.4.028.1A	Spare bleed union		1
21	539.4.036.1A	Microswitch		1
22	631.4.008.1A	Spare union		1
23	852.1.250.1A	Spacer		1

CATALOGUE No: 915.1.290.1F
ISSUED: 10 - 11

DRAWING 024 Front brake

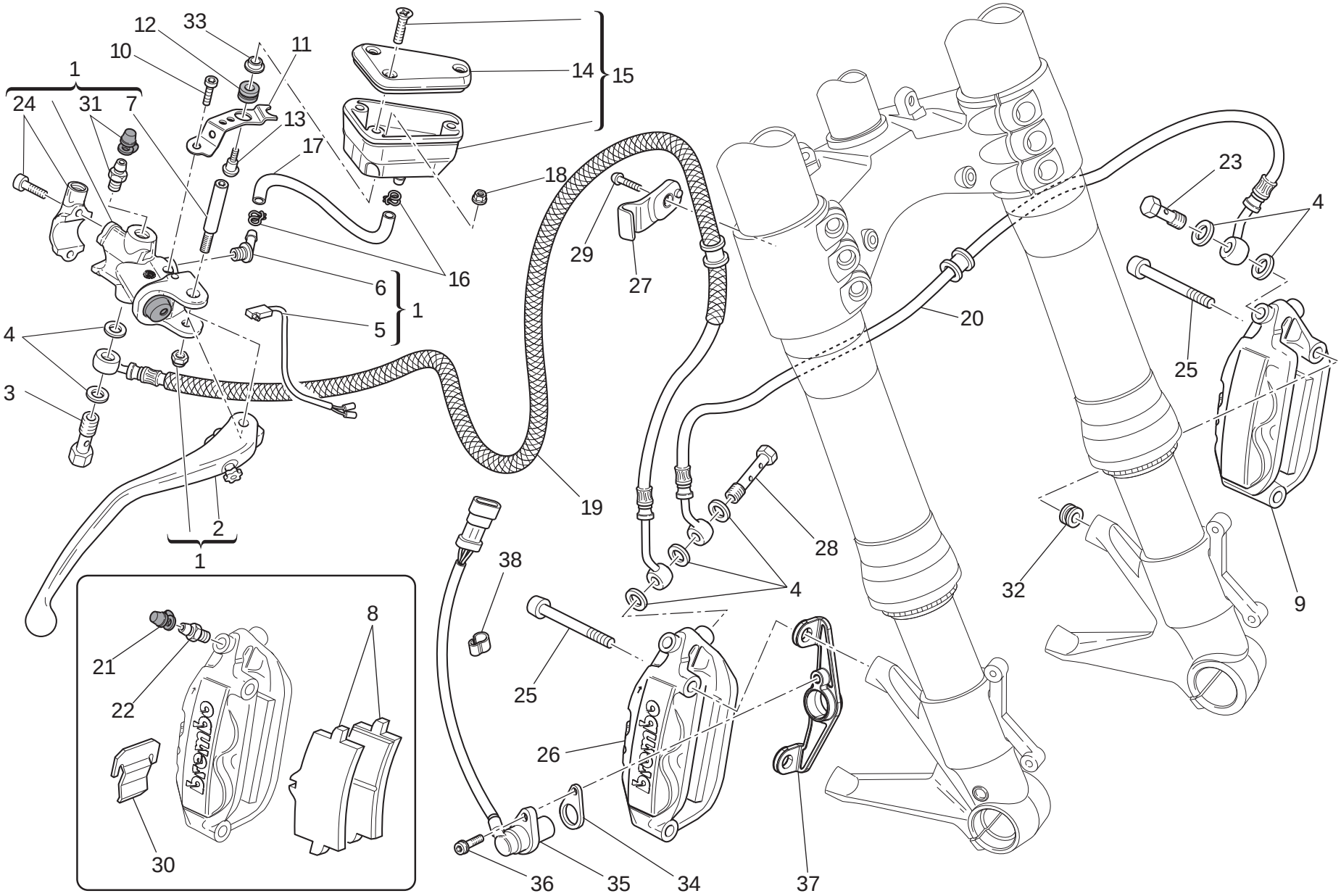

DRAWING 024 Front brake

NOTES NO.	CODE NO.	DESCRIPTION	VALIDITY	Q.TY
1	624.4.057.2A	Front brake pump		1
2	631.4.033.1A	Brake control lever		1
3	779.1.415.1A	Special screw		1
4	852.5.024.1A	Gasket th.1		7
5	539.4.035.1A	Microswitch		1
6	631.4.008.1A	Spare union		1
7	626.4.056.1A	Pin		1
8	613.4.090.1A	Pads pair		2
9	610.4.090.1C	Brake caliper (L.H.)		1
10	773.5.062.3B	Screw		1
11	829.1.979.1A	Bracket		1
12	0370.72.020	Vibration damper pad		1
13	779.1.092.1A	Screw		1
14	893.4.007.1A	Tank cap		1
15	585.4.011.1A	Complete oil tank		1
16	741.4.043.1A	Hose guide		2
17	877.1.138.1A	Tube		1
18	8000.56443	Nut		1
19	618.4.116.1A	Caliper pump pipe		1
20	618.4.075.1B	Front brake line		1
21	612.4.005.1A	Dust seal		2
22	187.1.002.1A	Bleed		2
23	779.1.397.1A	Special screw		1
24	626.4.067.1A	Spare bracket		1
25	779.1.331.1D	Screw		4
26	610.4.091.1C	Brake caliper (R.H.)		1
27	830.1.479.1A	Bracket		1
28	779.1.465.1A	Special screw		1
29	775.1.054.1A	Screw		1
30	612.4.037.1A	Spring		2
31	631.4.028.1A	Spare bleed union		1
32	713.1.364.1A	Spacer		2
33	852.1.250.1A	Spacer		1
34	713.1.192.1A	Spacer		1
35	552.4.037.2E	Speed sensor		1
36	771.5.665.8B	Screw		1
37	830.1.477.1A	Bracket		1
38	758.4.060.1A	Fairlead		5

CATALOGUE No: 915.1.290.1F
ISSUED: 10 - 11

DRAWING 025 Rear brake

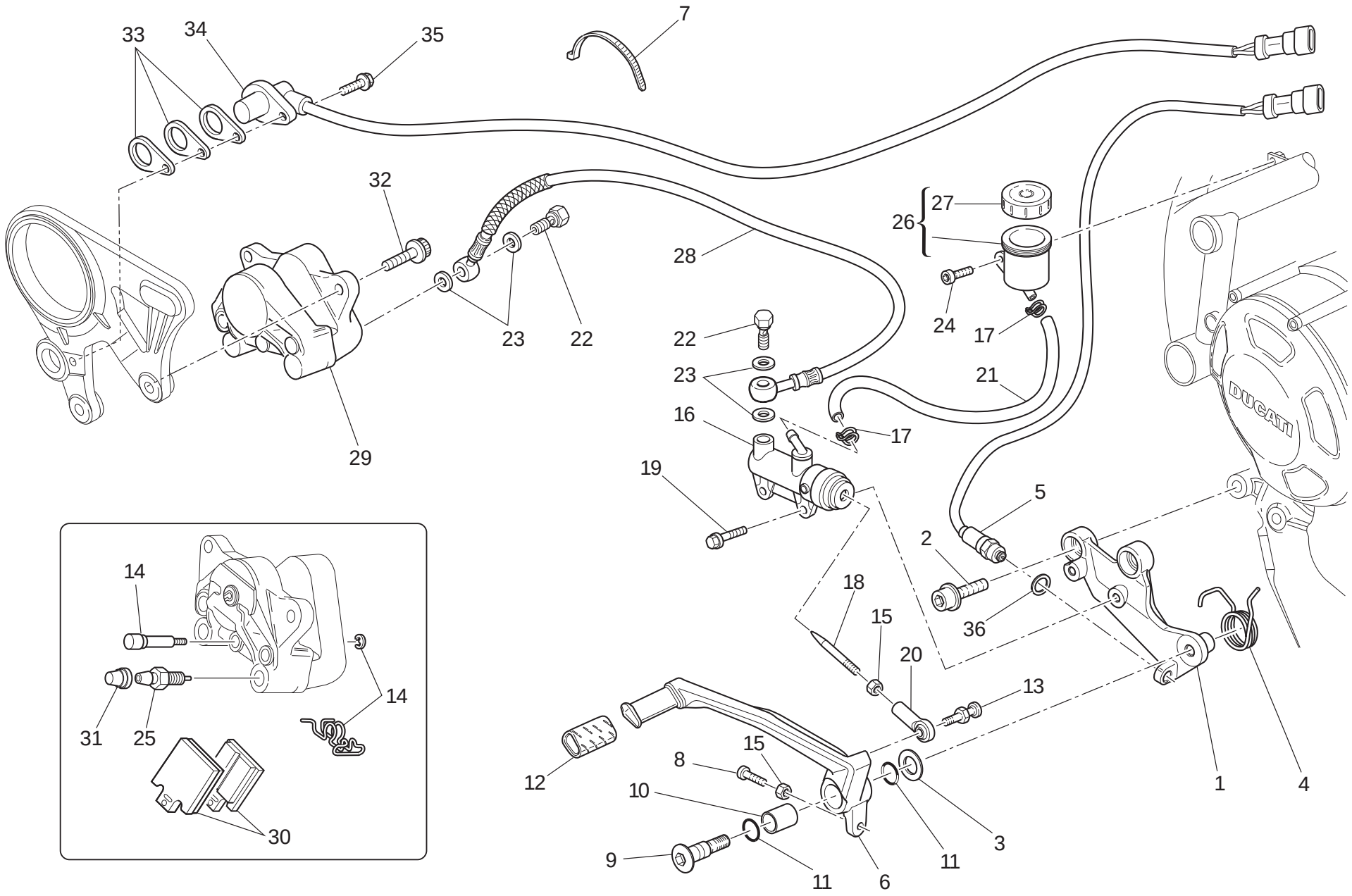

DRAWING 025 Rear brake

NOTES NO.	CODE NO.	DESCRIPTION	VALIDITY	Q.TY
1	829.1.984.1A	Plate		1
2	771.1.043.1A	Screw		2
3	852.1.151.1A	Washer		1
4	799.1.256.1A	Spring		1
5	539.4.003.1B	Switch		1
6	457.1.047.1A	Brake control lever (rear)		1
7	741.4.038.1A	Hose guide		3
8	779.1.237.1B	Adjusting screw		1
9	821.1.170.1B	Pin		1
10	712.1.034.1A	Bush		1
11	886.4.116.1A	O-ring		2
12	764.1.011.2A	Rubber pad		1
13	821.1.273.1A	Pin		1
14	612.4.016.1A	Spare pins and spring		1
15	747.5.003.1A	Nut		2
16	625.4.018.1B	Rear brake pump		1
17	741.4.043.1A	Hose guide		2
18	117.1.044.1A	Adjuster rod		1
19	772.1.063.1A	Screw		1
20	184.1.010.2A	Ball joint		1
21	877.1.139.1A	Tube		1
22	779.1.366.1AB	Special screw		2
23	852.5.024.1A	Gasket th.1		4
24	773.5.062.8B	Screw		1
25	631.4.016.1A	Bleed		1
26	585.4.001.1A	Complete oil tank		1
27	893.4.005.1A	Cap		1
28	619.4.042.2B	Rear brake line		1
29	611.4.029.1A	Rear brake caliper		1
30	613.4.038.1A	Pads pair		1
31	612.4.008.1A	Dust seal		1
32	771.5.723.8B	Screw		2
33	713.1.192.1A	Spacer		1
34	552.4.037.3E	Speed sensor		1
35	771.5.665.8B	Screw		1
36	420.2.000.8A	Copper gasket sp. 1		1

CATALOGUE No: 915.1.290.1F
ISSUED: 10 - 11

DRAWING 026 Front and rear wheels

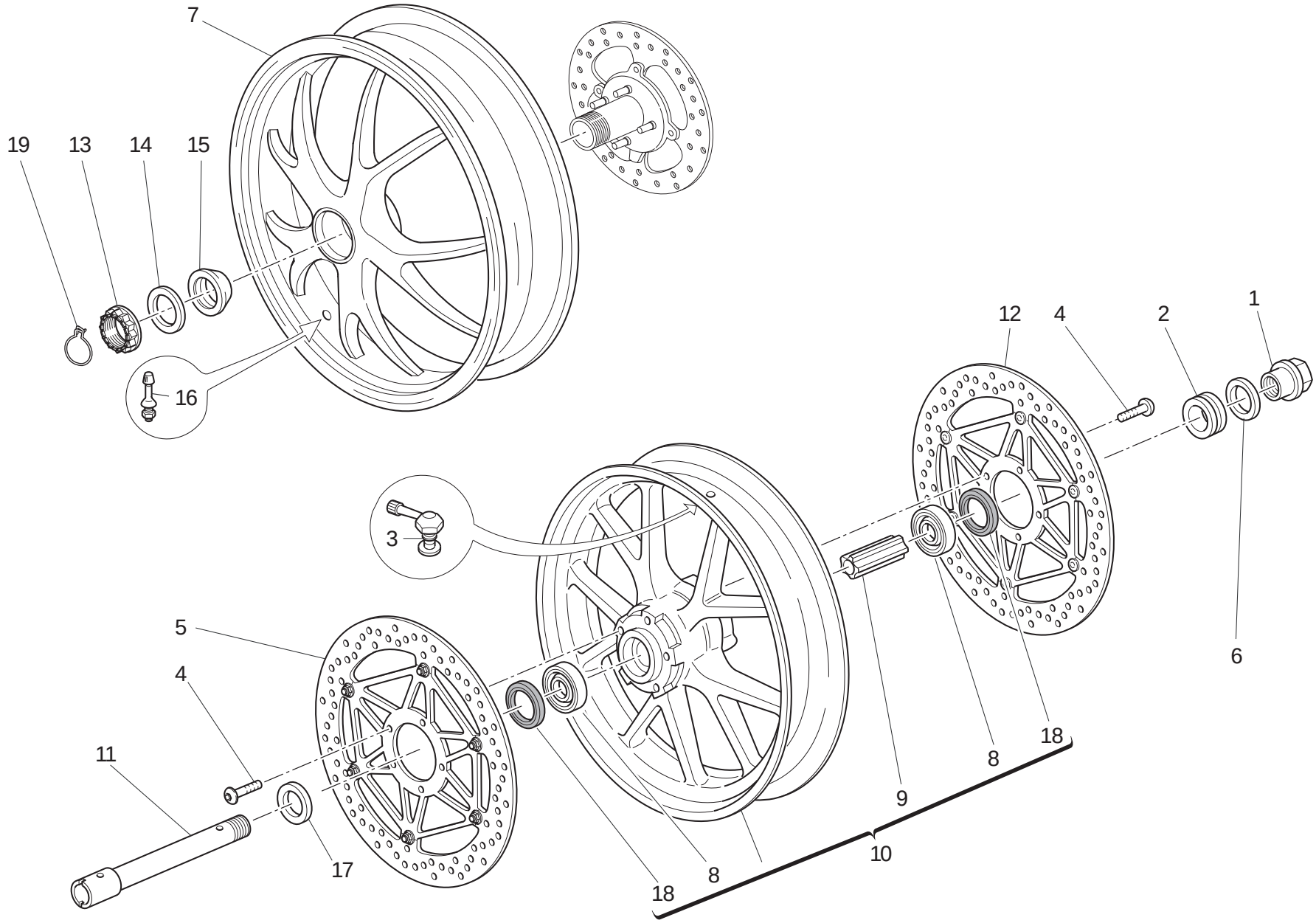

DRAWING 026 Front and rear wheels

NOTES NO.	CODE NO.	DESCRIPTION	VALIDITY	Q.TY
1	748.1.065.1A	Nut		1
2	713.1.197.3A	Spacer (L.H.)		1
3	497.2.001.2A	Valve		1
4	779.1.399.1A	Screw		10
5	492.4.102.1A	Brake disc (R.H.)		1
6	852.1.222.1A	Washer		1
7	502.2.125.1AB	Wheel rim (rear) (BLACK/RED STRIP)		1
8	702.5.045.1A	Bearing		2
9	714.1.047.1A	Spacer (internal)		1
10	501.2.115.1AB	Wheel rim (front) (BLACK/RED STRIP)		1
11	819.1.060.1A	Wheel spindle (front)		1
12	492.4.089.1A	Brake disc (L.H.)		1
13	750.1.139.1A	Nut		1
14	852.1.221.1A	Washer		1
15	714.1.323.1AA	Spacer		1
16	497.2.003.1A	Valve		1
17	713.1.196.1A	Spacer (R.H.)		1
18	930.4.052.1A	Seal ring		2
19	759.1.022.2A	Clip		1

NOTES NO.	CODE NO.	DESCRIPTION	VALIDITY	Q.TY

CATALOGUE No: 915.1.290.1F
ISSUED: 10 - 11

DRAWING 026a Rear wheel axle

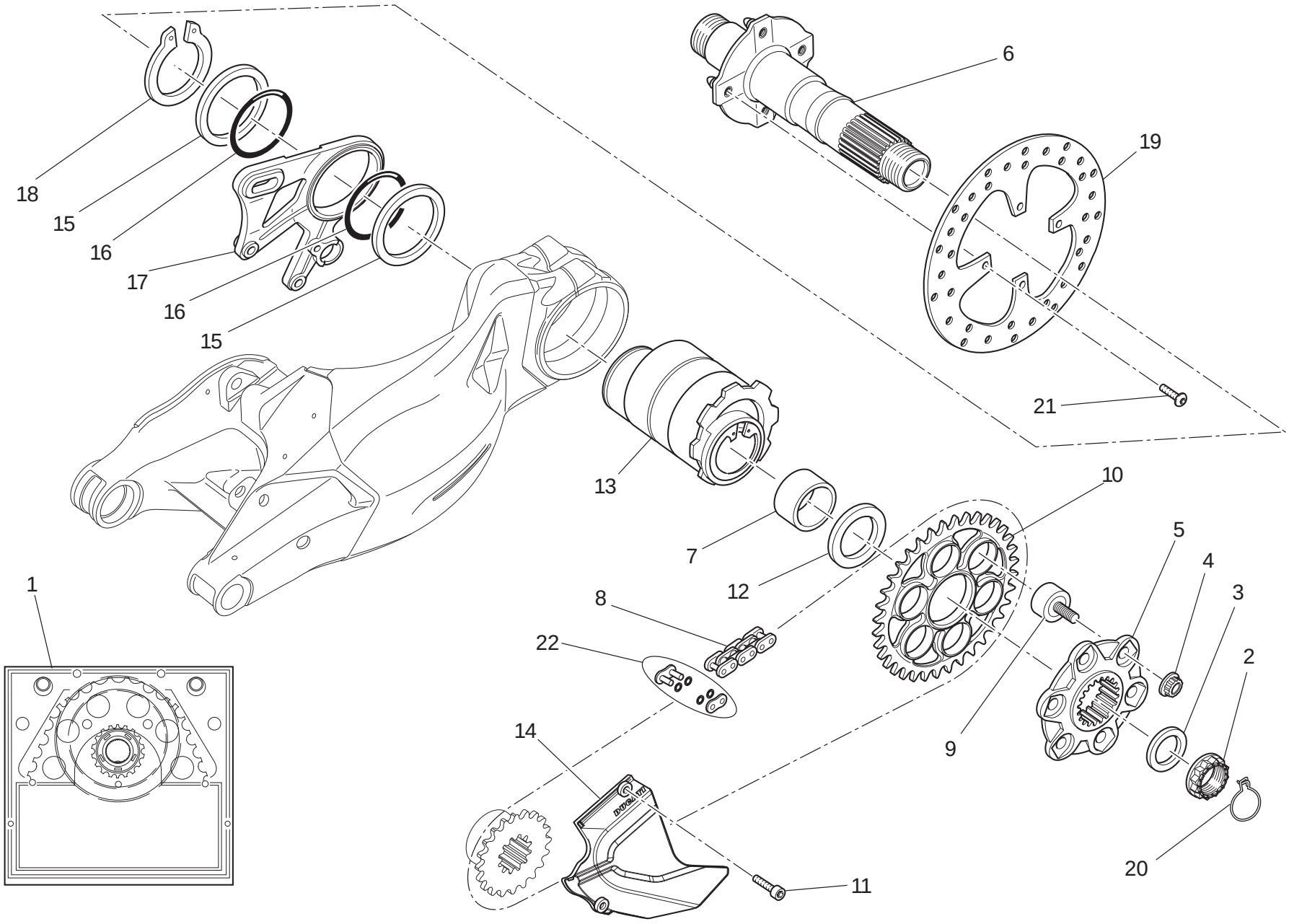

DRAWING 026a Rear wheel axle

NOTES NO.	CODE NO.	DESCRIPTION	VALIDITY	Q.TY
1	676.2.074.1A	Final drive kit		1
2	750.1.139.1A	Nut		1
3	852.1.221.1A	Washer		1
4	748.1.046.1A	Special nut (M10)		6
5	160.1.420.1A	Rear sprocket flange		1
6	819.Z.002.1A	Wheel spindle (rear)		1
7	881.1.054.1A	Inner ring		1
8	676.4.074.1A	Chain 101+1		1
9	700.1.057.1A	Rubber cush drive hub		6
10	494.1.133.1A	Ring gear Z=38		1
11	771.1.039.1B	Screw		2
12	714.1.075.1A	Spacer		1
13	756.2.013.1A	Hub		1
14	460.1.255.1A	Chain cover		1
15	852.1.217.1A	Washer		2
16	886.4.124.1A	O-ring		2
17	825.1.036.2A	Caliper holder plate		1
18	884.4.051.1A	Circlip		1
19	492.1.004.1A	Rear brake disc		1
20	759.1.022.2A	Clip		1
21	779.1.488.1A	Screw		4
22	677.4.012.1A	Drive chain joint		1

NOTES NO.	CODE NO.	DESCRIPTION	VALIDITY	Q.TY

CATALOGUE No: 915.1.290.1F
ISSUED: 10 - 11

DRAWING 027 Rear subframe

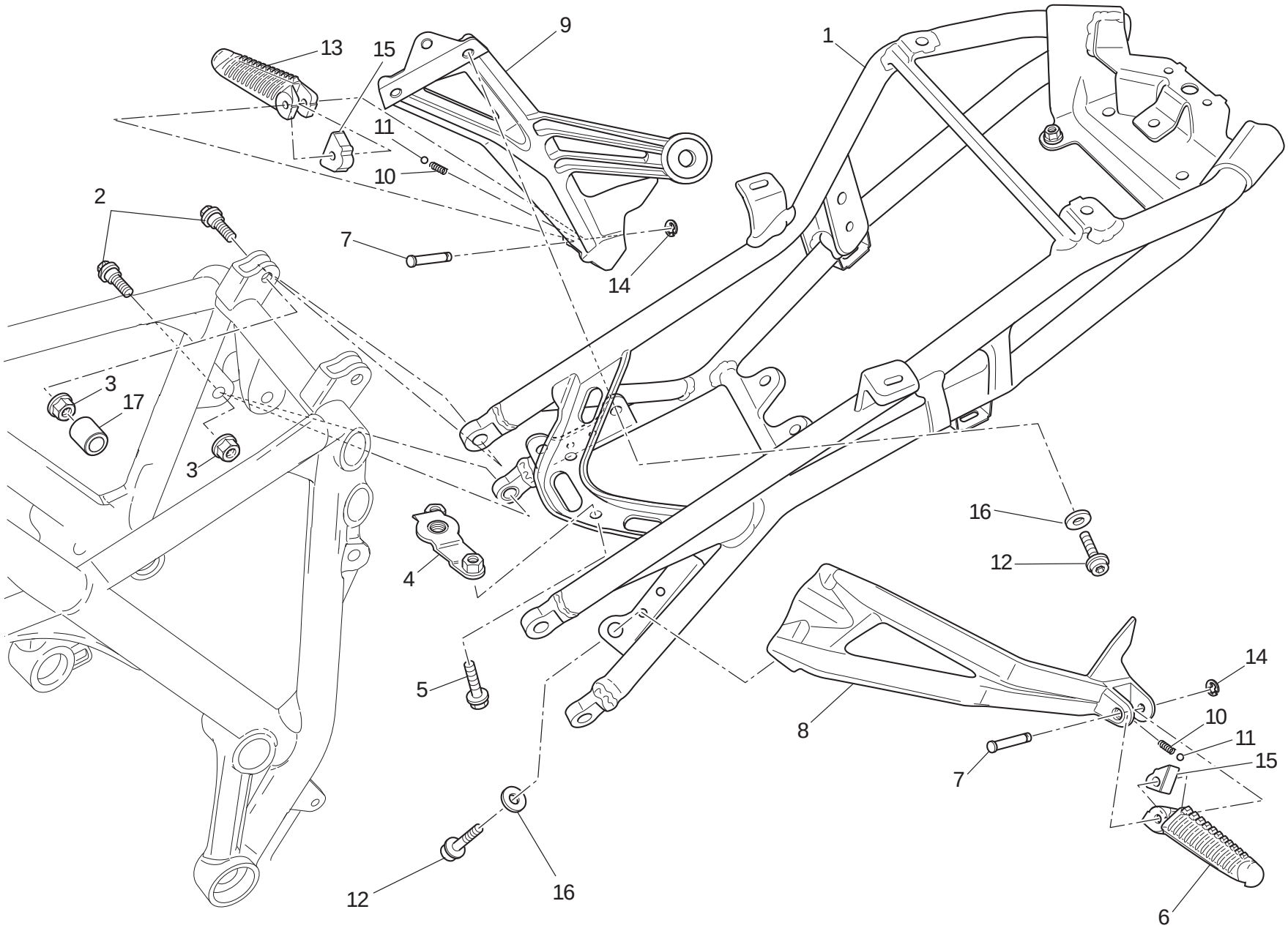

DRAWING 027 Rear subframe

NOTES NO.	CODE NO.	DESCRIPTION	VALIDITY	Q.TY
1	470.1705.1AA	Rear frame		1
2	772.1087.3AB	Screw		4
3	749.4.112.8B	Nut		4
4	830.1543.1A	Bracket		1
5	771.1369.1A	Screw		2
6	464.1055.1A	Foot peg (rear) (L.H.)		1
7	821.1051.1AB	Pin		2
8	824.1156.1A	Foot peg holder plate (rear) (L.H.)		1
9	824.1157.1A	Foot peg holder plate (rear) (R.H.)		1
10	799.1024.1A	Spring		2
11	847.4.002.1A	Ball		2
12	771.5.721.3B	Screw		6
13	464.1056.1A	Foot peg (rear) (R.H.)		1
14	884.5.003.1A	Circlip		2
15	696.1012.1A	Block		2
16	852.1232.1A	Washer		6
17	872.4.065.1A	Cap		2

NOTES NO.	CODE NO.	DESCRIPTION	VALIDITY	Q.TY

DRAWING 027a Number plate holder

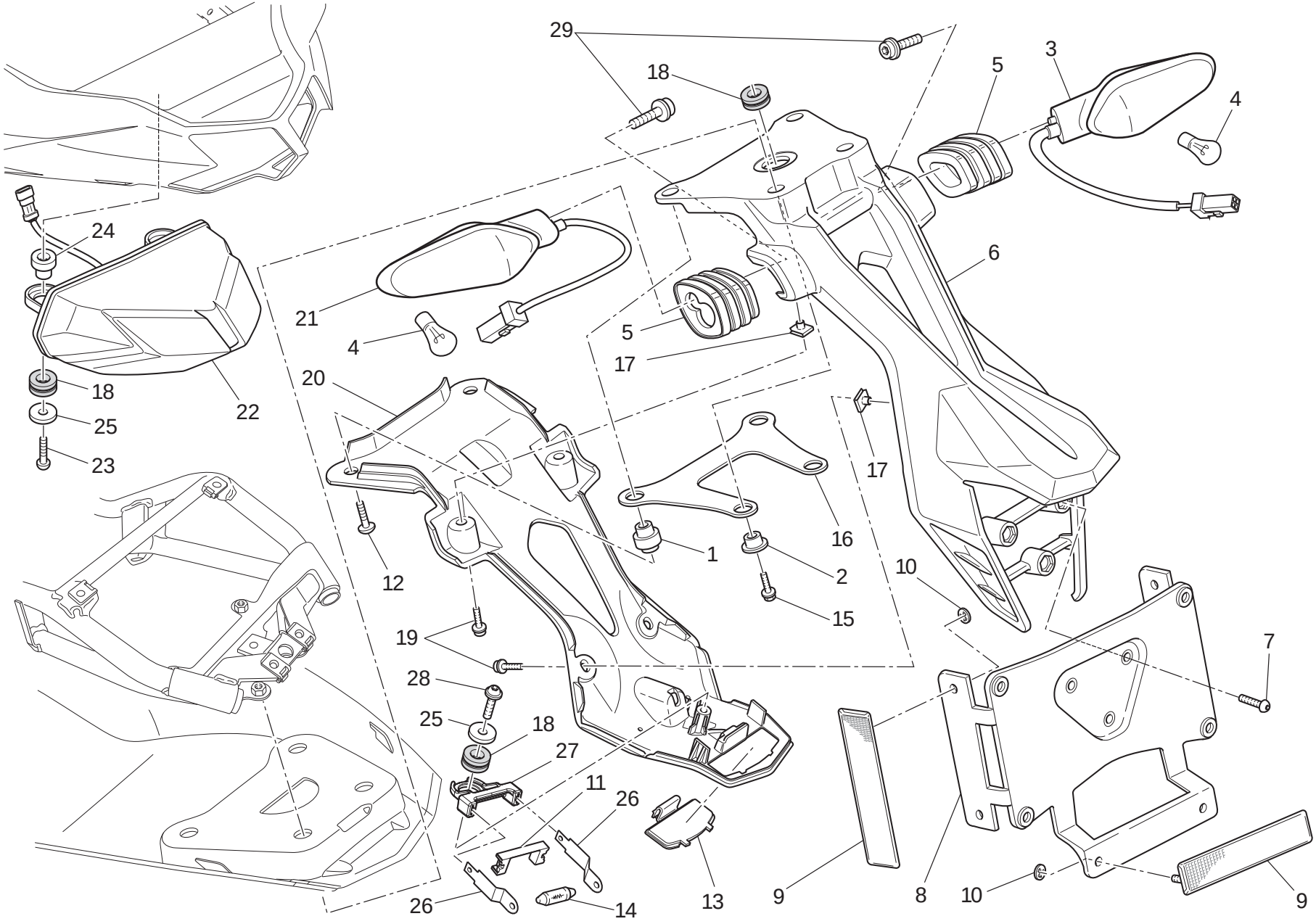

DRAWING 027a Number plate holder

NOTES NO.	CODE NO.	DESCRIPTION	VALIDITY	Q.TY
1	716.1.154.1A	Spacer (front)		2
2	716.1.155.1A	Spacer (rear)		2
3	530.1.022.4A	Turn indicator (rear) (R.H.)		1
4	390.4.021.1A	Bulb 12V-10W RY10W		2
5	713.1.470.2A	Spacer		2
6	829.1.981.1A	Number plate holder		1
7	775.5.013.1A	Screw		3
8	561.1.027.1A	Plate		1
9	529.1.010.1A	Reflector		3
10	850.4.052.1A	Quik fastening		6
11	713.1.924.1A	Spacer		1
12	772.1.101.1B	Screw		2
13	247.1.333.1A	Cover		1
14	390.4.016.2A	Bulb 12V-5W C5W		1
15	772.5.101.8B	Screw		2
16	829.1.980.1A	Holder		1
17	850.4.047.1A	Nut with clip		5
18	764.1.090.1A	Rubber pad		4
19	773.5.039.3B	Screw		5
20	247.1.345.1A	Mudflap		1
21	530.1.023.4A	Turn indicator (rear) (L.H.)		1
22	525.1.037.2A	Tail light		1
23	775.1.045.1A	Screw		2
24	716.1.418.1A	Spacer		2
25	852.4.173.1A	Washer		3
26	391.1.003.3A	Blade		2
27	830.1.548.3A	Bracket		1
28	774.4.006.1A	Screw		1
29	771.5.639.8B	Screw		2

CATALOGUE No: 915.1.290.1F
ISSUED: 10 - 11

CATALOGUE No: 915.1.290.1F
ISSUED: 10 - 11

DRAWING 028 Rear suspension

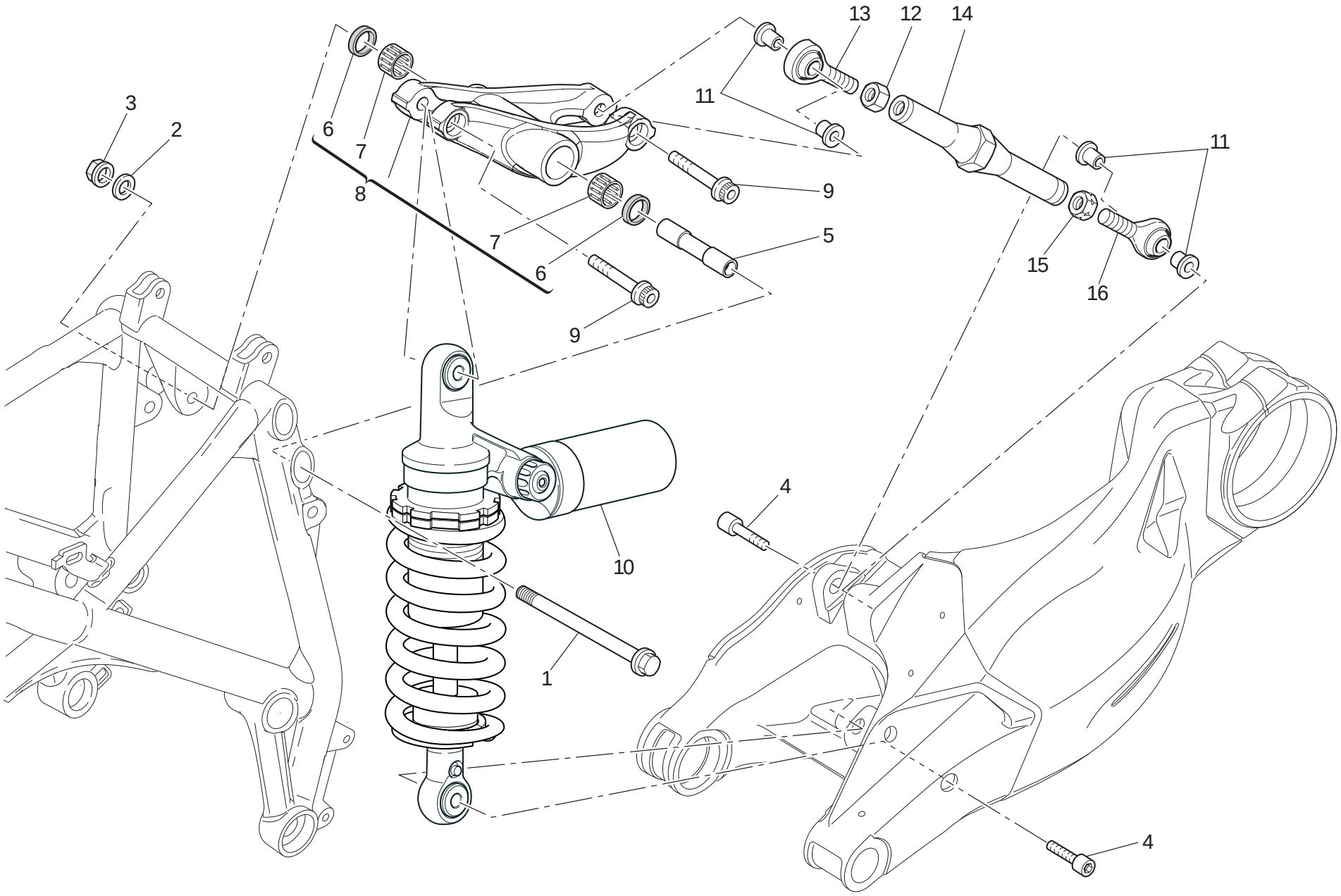

DRAWING 028 Rear suspension

NOTES NO.	CODE NO.	DESCRIPTION	VALIDITY	Q.TY
1	771.1.031.1A	Screw		1
2	713.1.239.1A	Washer		1
3	748.4.037.1AB	Nut		1
4	779.1.504.1A	Screw		2
5	715.1.003.1A	Spacer		1
6	930.4.011.1A	Seal ring		2
7	701.4.004.1A	Needle bearing		2
8	372.2.062.2A	Rocker assembly		1
9	771.5.938.8B	Screw		2
10	365.2.075.2A	Shock absorber (OHLINS)		1
11	710.1.132.1A	Bush		4
12	750.1.021.1A	Nut		1
13	848.4.047.1A	Ball joint		1
14	875.1.128.1A	Tie rod		1
15	750.1.022.1A	Nut		1
16	848.4.048.1A	Ball joint		1

CATALOGUE No: 915.1.290.1F
ISSUED: 10 - 11

DRAWING 028a Swingarm

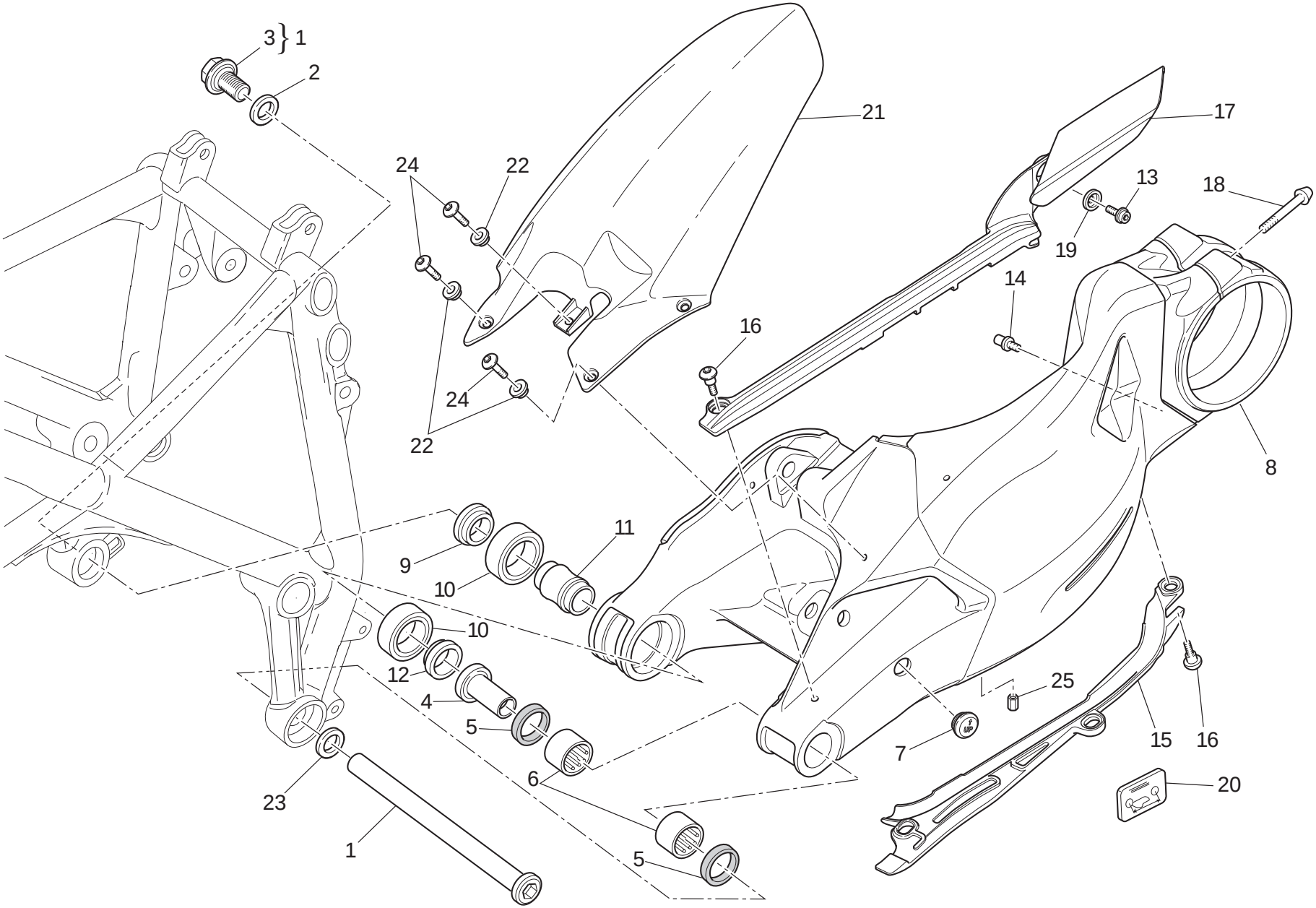

DRAWING 028a Swingarm

NOTES NO.	CODE NO.	DESCRIPTION	VALIDITY	Q.TY
1	369.2.123.3A	Swingarm pivot		1
2	852.1.216.1A	Washer		1
3	772.1.078.2A	Special screw		1
4	710.1.109.1A	Bush		1
5	930.5.012.1A	Seal ring		2
6	701.4.017.1A	Needle bearing		2
7	872.1.054.2A	Cap		1
8	370.2.114.1BA	Complete swingarm		1
9	712.1.029.1A	Spacer		1
10	702.5.045.1A	Bearing		2
11	713.1.187.1A	Spacer		1
12	712.1.030.1A	Spacer		1
13	773.5.487.8B	Screw		1
14	832.1.003.1C	Pin		1
15	447.1.079.2A	Lower chain sliding shoe		1
16	779.1.440.1B	Screw		4
17	447.1.095.1A	Upper chain sliding shoer		1
18	779.1.503.1A	Screw		2
19	841.1.050.1A	Retainer		1
20	433.1.352.1A	Chain adjustment sticker		1
21	565.1.044.1B	Rear mudguard		1
22	716.1.401.1A	Spacer		4
23	852.1.144.1A	Spacer th. 1,4		1
24	772.1.088.2C	Screw		4
25	850.4.124.1A	Insert		3

CATALOGUE No: 915.1.290.1F
ISSUED: 10 - 11

DRAWING 029 Air intake - oil breather

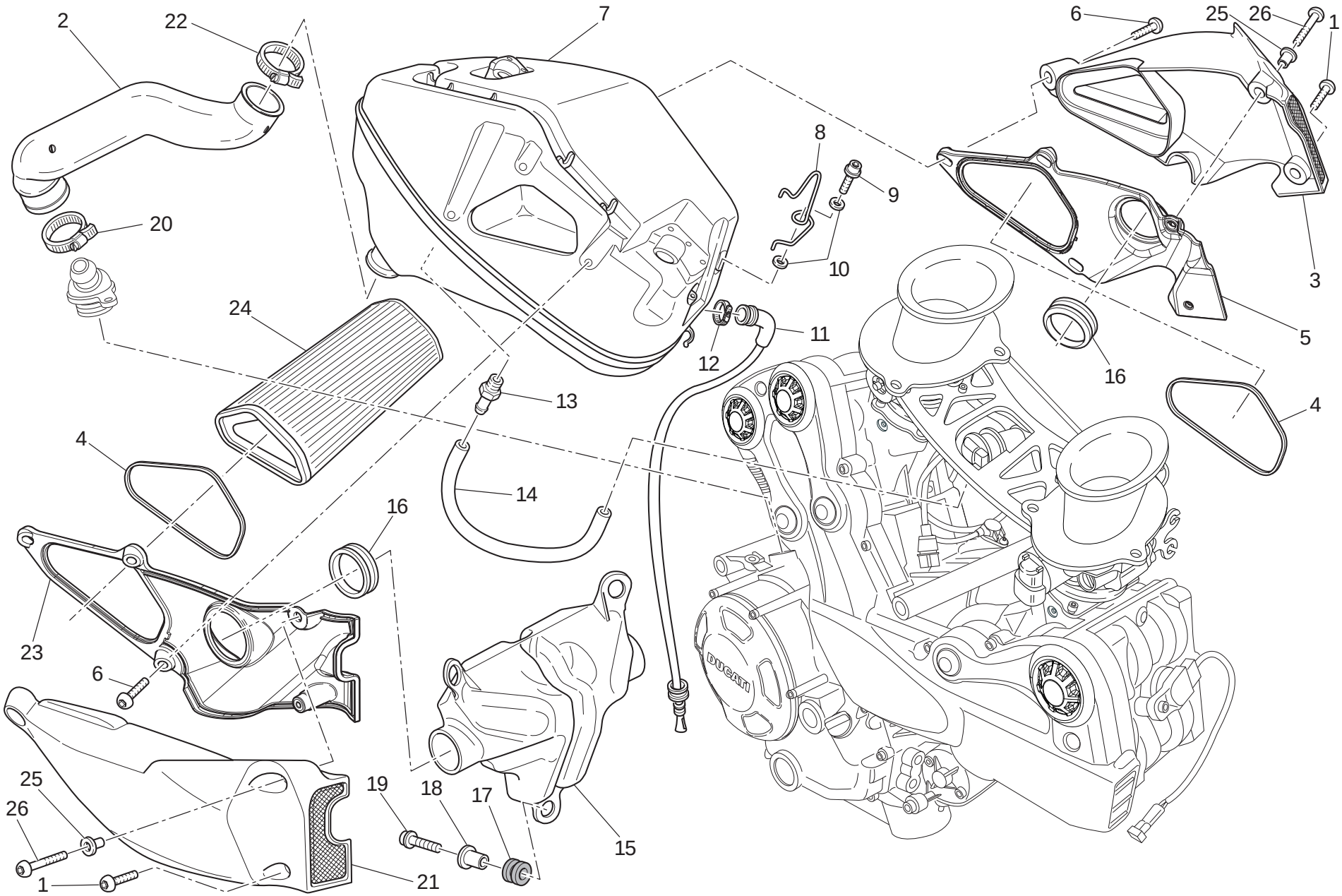

DRAWING 029 Air intake - oil breather

NOTES NO.	CODE NO.	DESCRIPTION	VALIDITY	Q.TY
1	772.1.109.1A	Screw		2
2	876.1.102.2B	Breather pipe		1
3	484.2.075.1B	Air manifold (external) (L.H.)		1
4	788.1.098.1A	Gasket		2
5	484.1.077.1B	Air manifold (internal) (L.H.)		1
6	772.1.042.2A	Screw		6
7	442.1.139.3B	Air filter box		1
8	758.1.036.1A	Fairlead		1
9	773.1.005.1A	Screw		1
10	852.4.021.1A	Washer		2
11	877.2.006.1B	Tube		1
12	741.4.063.1A	Hose guide		1
13	814.1.311.1A	Pressure pick-up point		1
14	934.1.010.1A	Tube		1
15	442.1.184.1A	Resounder		1
16	791.1.067.1A	Gasket		2
17	764.1.090.1A	Rubber pad		3
18	716.1.143.1A	Spacer		3
19	771.1.226.1A	Screw		3
20	741.4.186.1A	Clamp		1
21	484.2.076.1B	Air manifold (external) (R.H.)		1
22	741.4.165.1A	Clamp		1
23	484.1.078.1B	Air manifold (internal) (R.H.)		1
24	426.1.020.1A	Air filter		1
25	716.1.407.1A	Spacer		2
26	772.1.086.1B	Special screw		2

NOTES NO.	CODE NO.	DESCRIPTION	VALIDITY	Q.TY

CATALOGUE No: 915.1.290.1F
ISSUED: 10 - 11

DRAWING 030 Radiator

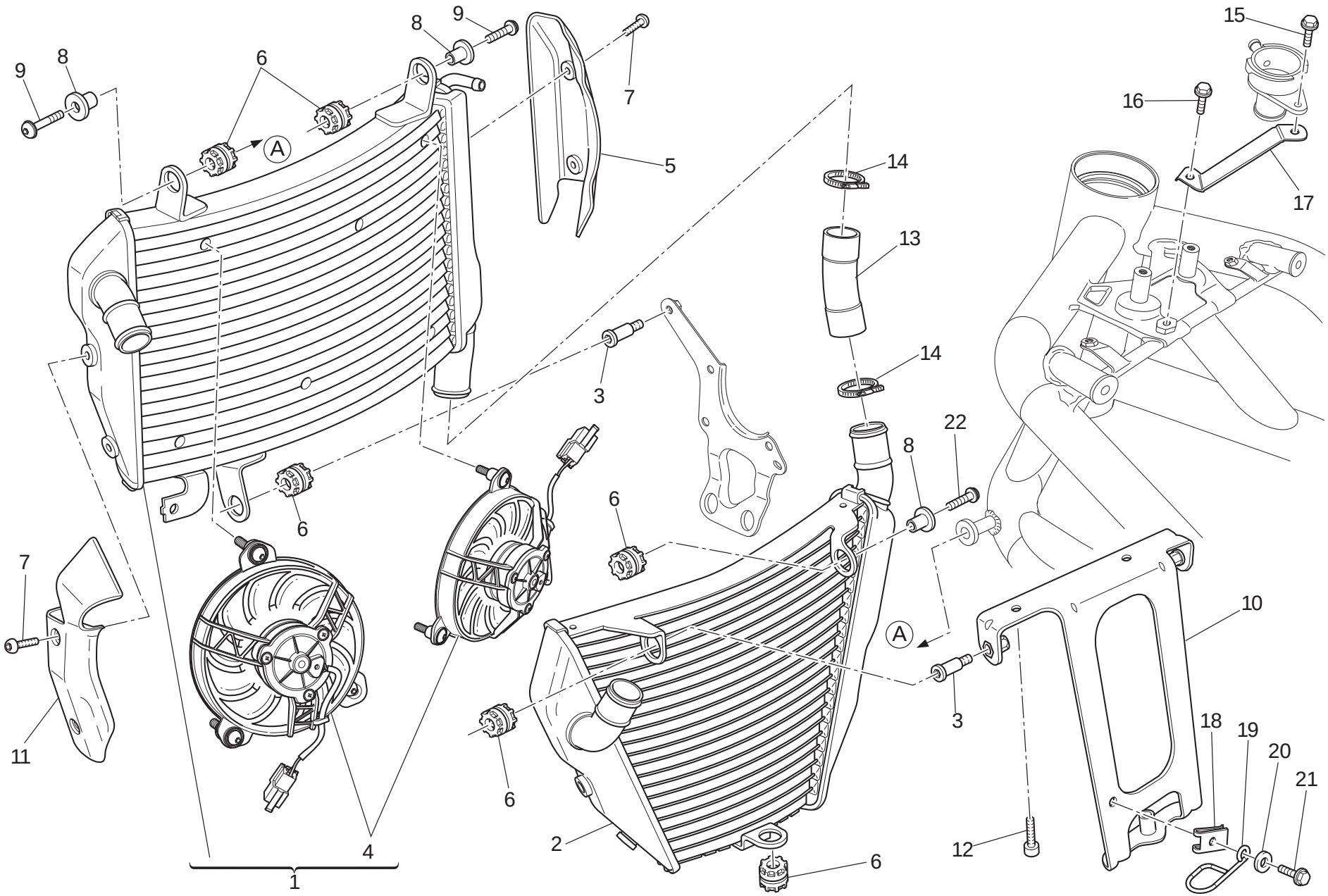

DRAWING 030 Radiator

NOTES NO.	CODE NO.	DESCRIPTION	VALIDITY	Q.TY
1	548.4.083.1A	Water radiator (upper)		1
2	548.4.084.1A	Water radiator (bottom)		1
3	779.1.202.1C	Special screw		1
4	550.4.020.1A	Electric fan		2
5	460.1.366.1AB	Cooler cowling (R.H.) (BLACK)		1
6	764.1.022.1A	Vibration damper pad		6
7	775.1.054.1A	Screw		4
8	716.1.419.1A	Spacer		3
9	772.4.046.3C	Screw		2
10	829.2.766.1A	Holder (bottom)		1
11	460.1.367.1AB	Cooler cowling (L.H.) (BLACK)		1
12	771.5.064.8B	Screw		2
13	800.1.170.2A	Tube		1
14	741.4.190.1A	Clamp		2
15	772.1.047.1B	Screw		1
16	772.1.059.1A	Screw		1
17	684.1.073.1A	Stud bolt		1
18	850.4.038.1A	Nut with clip		1
19	881.1.023.1A	Ring		1
20	852.5.027.1A	Washer		1
21	772.1.061.1A	Screw		1
22	772.4.048.3C	Screw		1

CATALOGUE No: 915.1.290.1F
ISSUED: 10 - 11

DRAWING 031 Cooling system

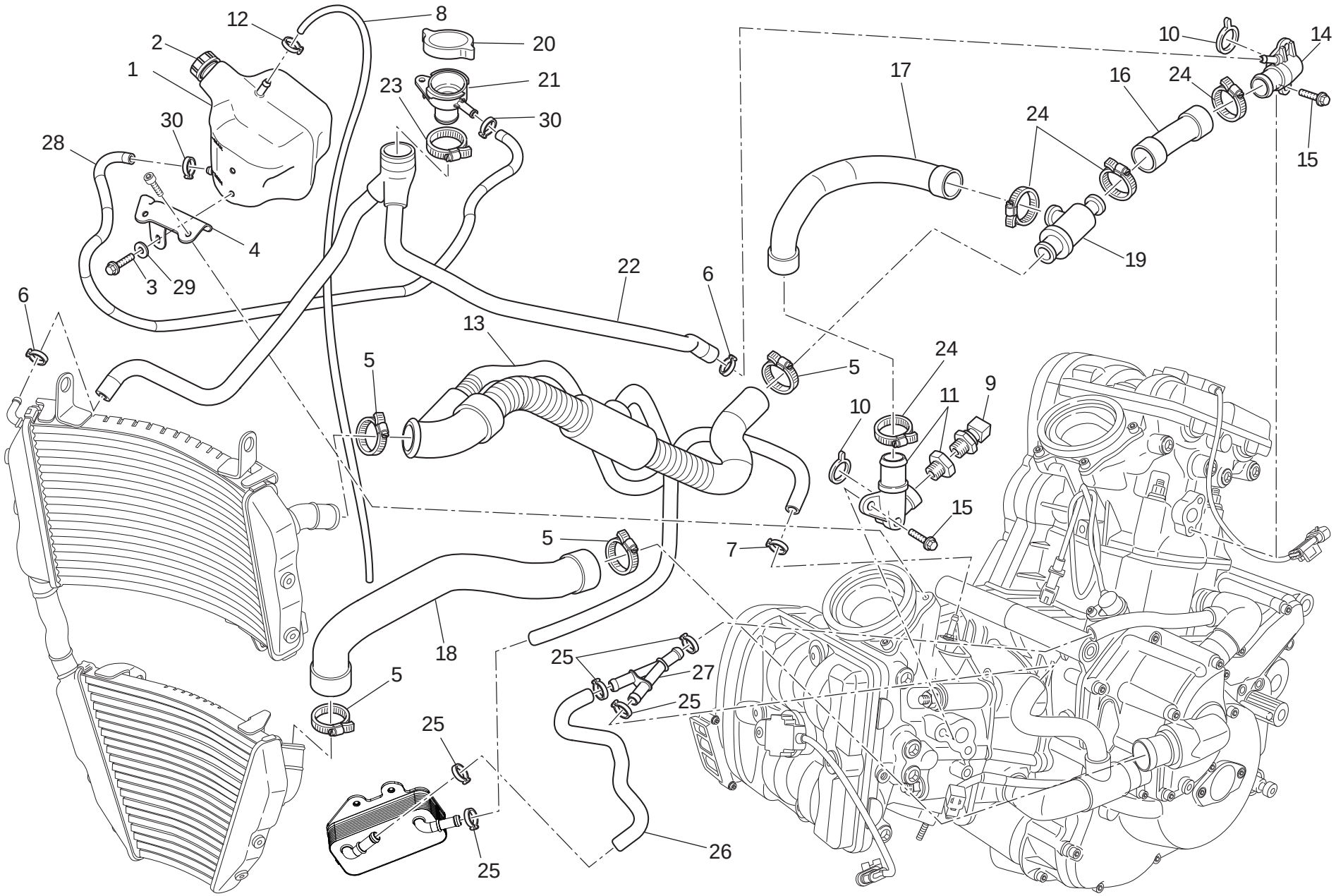

DRAWING 031 Cooling system

NOTES NO.	CODE NO.	DESCRIPTION	VALIDITY	Q.TY
1	585.1.064.1A	Water tank		1
2	893.1.014.3A	Tank cap		1
3	772.1.059.1A	Screw		2
4	830.1.441.1A	Bracket		1
5	741.4.190.1A	Clamp		4
6	741.4.198.1A	Clamp		2
7	741.4.001.1A	Hose guide		1
8	934.1.006.1A	Breather pipe		1
9	552.4.013.1A	Sensor		1
10	886.4.103.1A	O-ring		2
11	814.1.236.1C	Water outlet union (horizontal)		1
12	8A00.67610	Hose guide		1
13	800.1.171.3A	Cooler/thermostat hose		1
14	814.1.326.1A	Water outlet union (vertical)		1
15	772.1.062.3B	Screw		4
16	800.1.172.2A	Thermostat/pump hose (vertical)		1
17	800.1.173.1A	Thermostat/pump hose (horizontal)		1
18	800.1.169.1A	Pump/cooler hose		1
19	553.4.004.1A	Thermostat		1
20	872.4.060.1A	Cap		1
21	668.4.001.1A	Filler		1
22	800.1.177.2A	Cooler/cap hose		1
23	741.4.156.1A	Clamp		1
24	741.4.192.1A	Clamp		4
25	741.4.130.1A	Clamp		5
26	800.1.176.1A	Rubber hose		1
27	814.1.327.1A	Union "Y"		1
28	934.1.012.3A	Breather pipe		1
29	852.1.176.1A	Washer		2
30	741.4.004.1A	Hose guide		2

CATALOGUE No: 915.1.290.1F
ISSUED: 10 - 11

DRAWING 032 Fuel tank

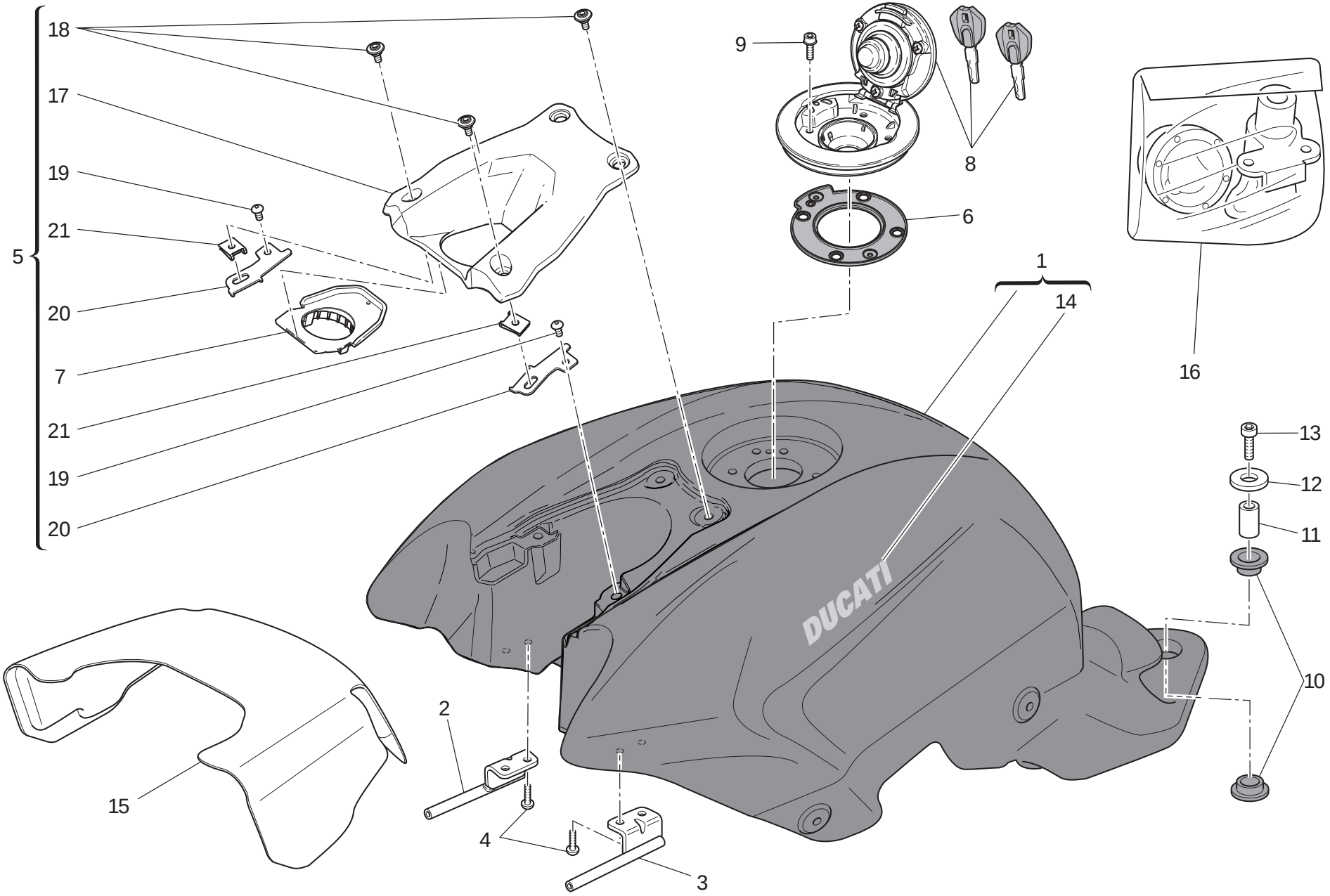

DRAWING 032 Fuel tank

NOTES NO.	CODE NO.	DESCRIPTION	VALIDITY	Q.TY
1	586.1.186.1AA	Tank (short) (RED)		1
1	586.1.186.1CG	Tank (short) (RACE TITANIUM)		1
2	587.1.051.2A	Tank front connection (R.H.)		1
3	587.1.052.2A	Tank front connection (L.H.)		1
4	772.1.050.1C	Screw		4
5	699.2.633.1A	Cover kit		1
6	866.4.006.1A	Gasket		1
7	480.1.544.1A	Cover		1
8	895.2.020.1A	Tank cap		1
9	771.5.640.8B	Screw		4
10	764.1.001.1A	Rubber pad		2
11	713.1.330.1A	Spacer		1
12	852.1.099.1A	Washer		1
13	771.5.728.8B	Screw		1
14	438.1.365.1AA	Sticker "DUCATI" (for RED)		2
14	438.1.365.1AK	Sticker "DUCATI" (for RACE TITANIUM)		2
15	486.1.081.1A	Panel		1
16	598.2.100.1A	Locks kit		1
17	480.1.536.1A	Cover		1
18	772.1.085.3B	Special screw		4
19	775.5.025.1A	Screw		2
20	827.1.648.1AA	Plate		2
21	850.4.055.1A	Nut with clip		2

NOTES NO.	CODE NO.	DESCRIPTION	VALIDITY	Q.TY

CATALOGUE No: 915.1.290.1F
ISSUED: 10 - 11

DRAWING 032a Fuel system

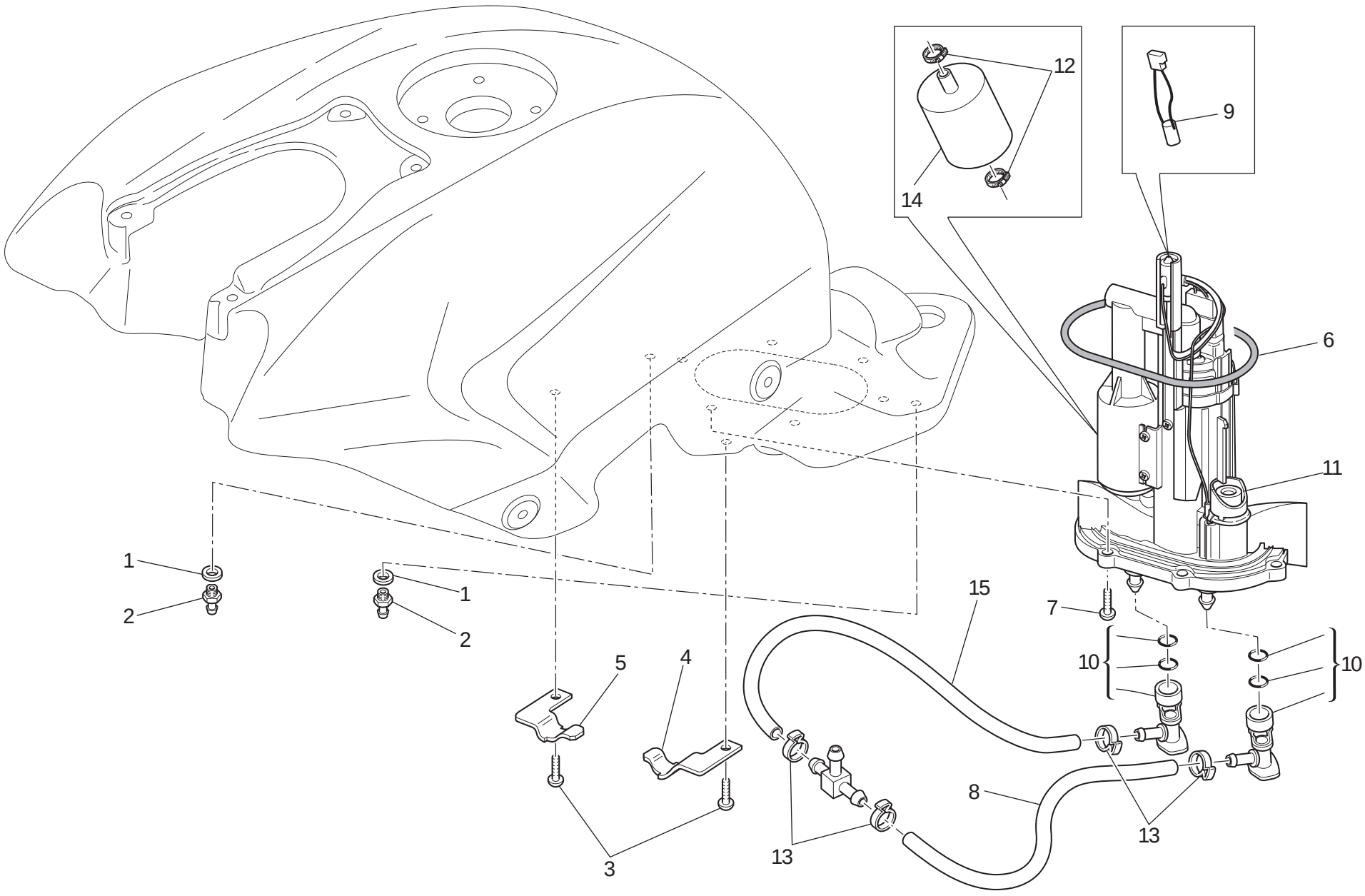

DRAWING 032a Fuel system

NOTES NO.	CODE NO.	DESCRIPTION	VALIDITY	Q.TY
1	886.1013.1A	Gasket		2
2	814.1179.1A	Union		2
3	775.1051.1A	Screw		2
4	830.1555.1A	Plate (L.H.)		1
5	830.1554.1A	Plate (R.H.)		1
6	886.5.048.1A	O-Ring		1
7	771.1044.1A	Screw		6
8	590.1360.1A	Tube		1
9	552.4.048.2A	Thermistor		1
10	814.4.010.1A	Quick-coupling union		2
11	160.2.366.1A	Flange		1
12	699.2.345.1A	Clamps kit		1
13	287.4.024.1B	Clamp		4
14	425.4.004.1B	Fuel filter		1
15	590.1362.1A	Tube		1

NOTES NO.	CODE NO.	DESCRIPTION	VALIDITY	Q.TY

CATALOGUE No: 915.1290.1F
ISSUED: 10 - 11

DRAWING 033 Seat

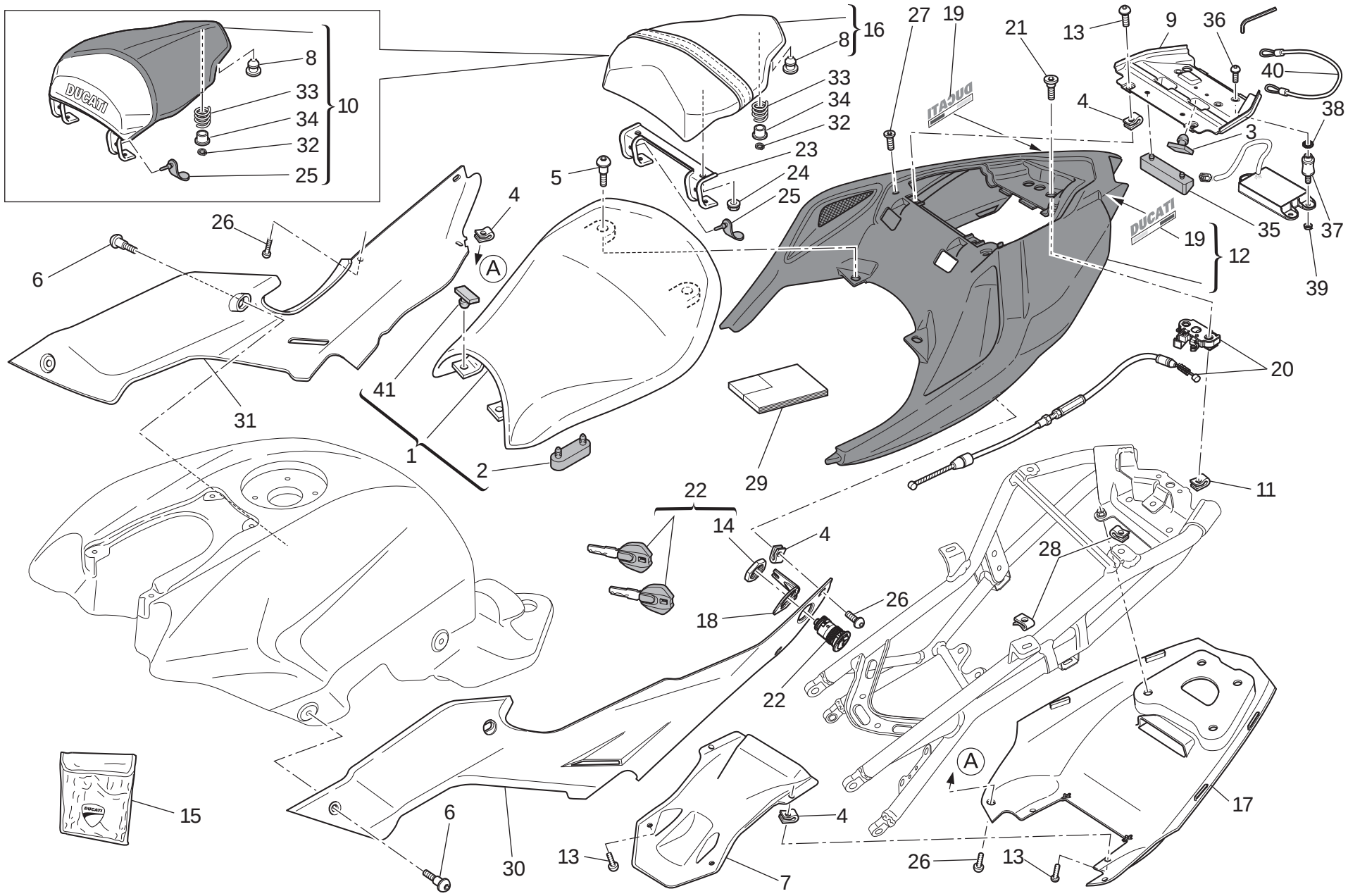

DRAWING 033 Seat

NOTES NO.	CODE NO.	DESCRIPTION	VALIDITY	Q.TY
1	595.1.100.2A	Rider seat		1
2	866.1.104.1A	Rubber pad (big)		4
3	866.1.118.1A	Rubber pad (little)		2
4	850.4.047.1A	Nut with clip		10
5	772.1.084.1A	Special screw		2
6	772.1.085.3B	Special screw		4
7	483.3.082.1B	Tail guard (front) (bottom)		1
8	866.1.107.1A	Rubber pad (rear)		4
9	483.1.081.3A	Chamber		1
10	247.2.342.4AA	Cover seat (RED)		1
10	247.2.342.4CG	Cover seat (RACE TITANIUM)		1
11	850.4.038.1A	Nut with clip		2
12	483.2.075.1AA	Tail guard (RED)		1
12	483.2.075.1CG	Tail guard (RACE TITANIUM)		1
13	772.1.109.1C	Screw		4
14	750.1.155.1A	Special nut		1
15	697.2.025.2A	Tool bag		1
16	595.1.101.2A	Pillion rider seat		1
17	483.1.076.1A	Tail guard (rear) (bottom)		1
18	827.1.482.1A	Plate		1
19	438.1.081.1A	Sticker "DUCATI" (for RED)		2
19	438.1.610.1A	Sticker "DUCATI" (for RACE TITANIUM)		2
20	598.1.013.1A	Lock latch		1
21	779.1.498.1A	Special screw		2
22	598.2.061.1A	Seat lock		1
23	830.1.564.1A	Hook		1
24	749.4.031.1A	Nut		2
25	764.1.054.1A	Rubber pad		4
26	772.1.109.1A	Screw		6
27	779.1.499.2A	Special screw		2
28	850.4.055.1A	Nut with clip		14
29	913.7.189.1B	Owner's manual		1
30	482.1.156.1A	Body panel (L.H.)		1
31	482.1.157.1A	Body panel (R.H.)		1
32	884.4.025.1A	Circlip		2
33	799.1.175.1A	Spring		2
34	841.1.037.1A	Retainer		2
35	866.1.108.2A	Battery resting buffer		1
36	772.1.104.1A	Screw		3
37	700.1.060.1A	Vibration damper		3
38	855.4.001.1A	Spring washer		3
39	748.5.006.1A	Nut		3
40	732.1.017.1A	Helmet anti-theft wire		1
41	866.1.030.1A	Rubber pad		2

CATALOGUE No: 915.1.290.1F
ISSUED: 10 - 11

DRAWING 034 Half fairing

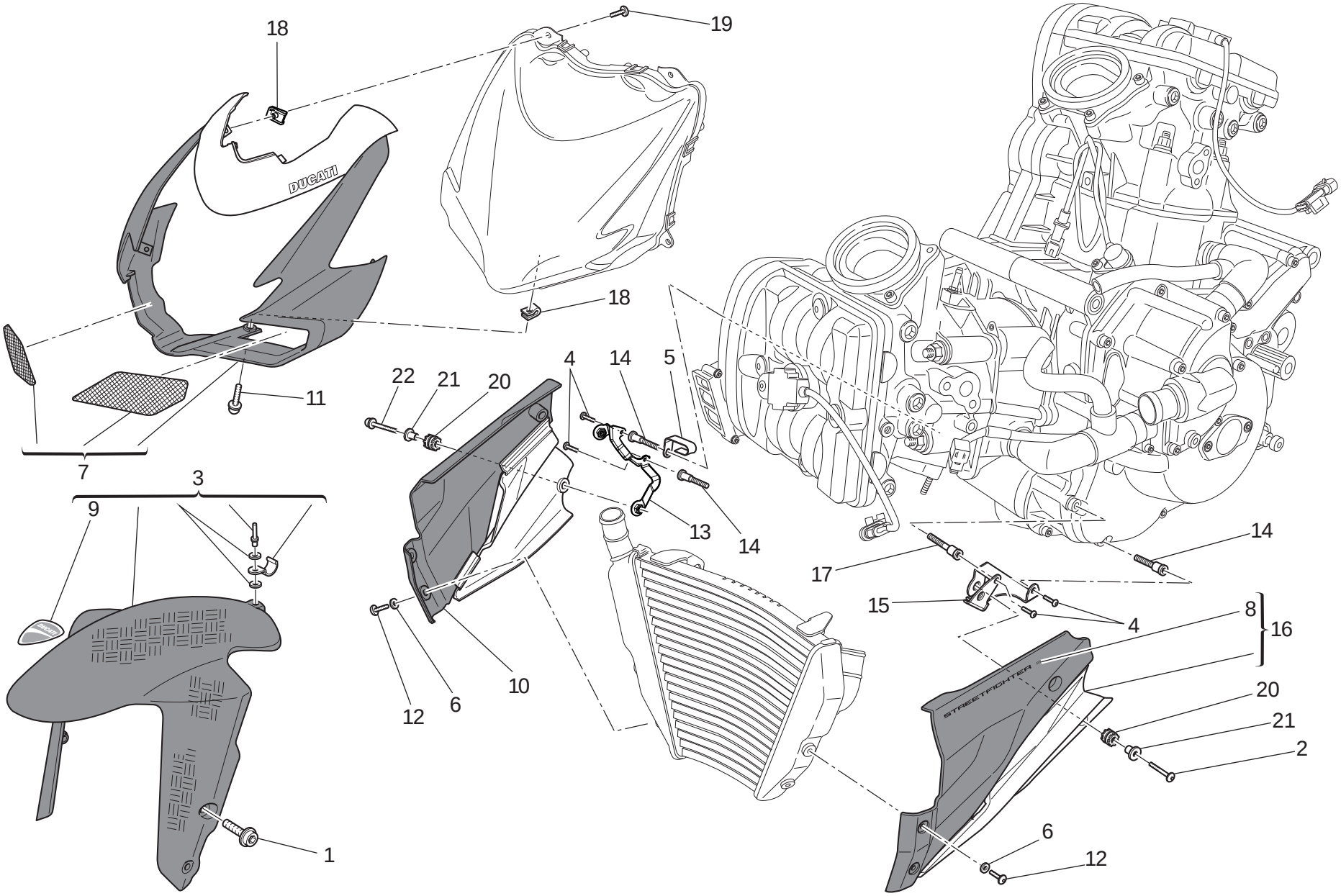

DRAWING 034 Half fairing

NOTES NO.	CODE NO.	DESCRIPTION	VALIDITY	Q.TY
1	772.1.089.3B	Screw		4
2	772.4.046.3C	Screw		3
3	564.2.079.1B	Front mudguard (CARBON)		1
4	775.1.051.1B	Screw		4
5	830.1.494.1B	Fairlead		1
6	856.1.042.1A	Nylon washer		4
7	481.2.056.1AA	Headlight fairing (RED)		1
7	481.2.056.1CG	Headlight fairing (RACE TITANIUM)		1
8	438.1.087.1A	Decal "Streetfighter S" (for RED)		2
8	438.1.088.1A	Decal "Streetfighter S" (for RACE TITANIUM)		2
9	438.1.474.1A	Sticker "DUCATI"		1
10	480.2.271.1AA	Push rod (R.H.) (RED)		1
10	480.2.281.1CG	Push rod (R.H.) (RACE TITANIUM)		1
11	772.4.026.3C	Screw		1
12	772.1.102.1A	Screw		4
13	827.1.531.1A	Holder (R.H.)		1
14	779.1.605.1A	Special screw		3
15	827.1.530.1A	Holder (L.H.)		1
16	480.2.270.1AA	Push rod (L.H.) (RED)		1
16	480.2.280.1CG	Push rod (L.H.) (RACE TITANIUM)		1
17	779.1.618.1A	Special screw		1
18	850.4.047.1A	Nut with clip		5
19	772.1.109.1A	Screw		4
20	764.1.022.1A	Vibration damper pad		4
21	716.1.003.1A	Spacer		4
22	772.4.044.3C	Screw		1

NOTES NO.	CODE NO.	DESCRIPTION	VALIDITY	Q.TY

CATALOGUE No: 915.1.290.1F
ISSUED: 10 - 11

DRAWING 035 Evaporative emissions canister

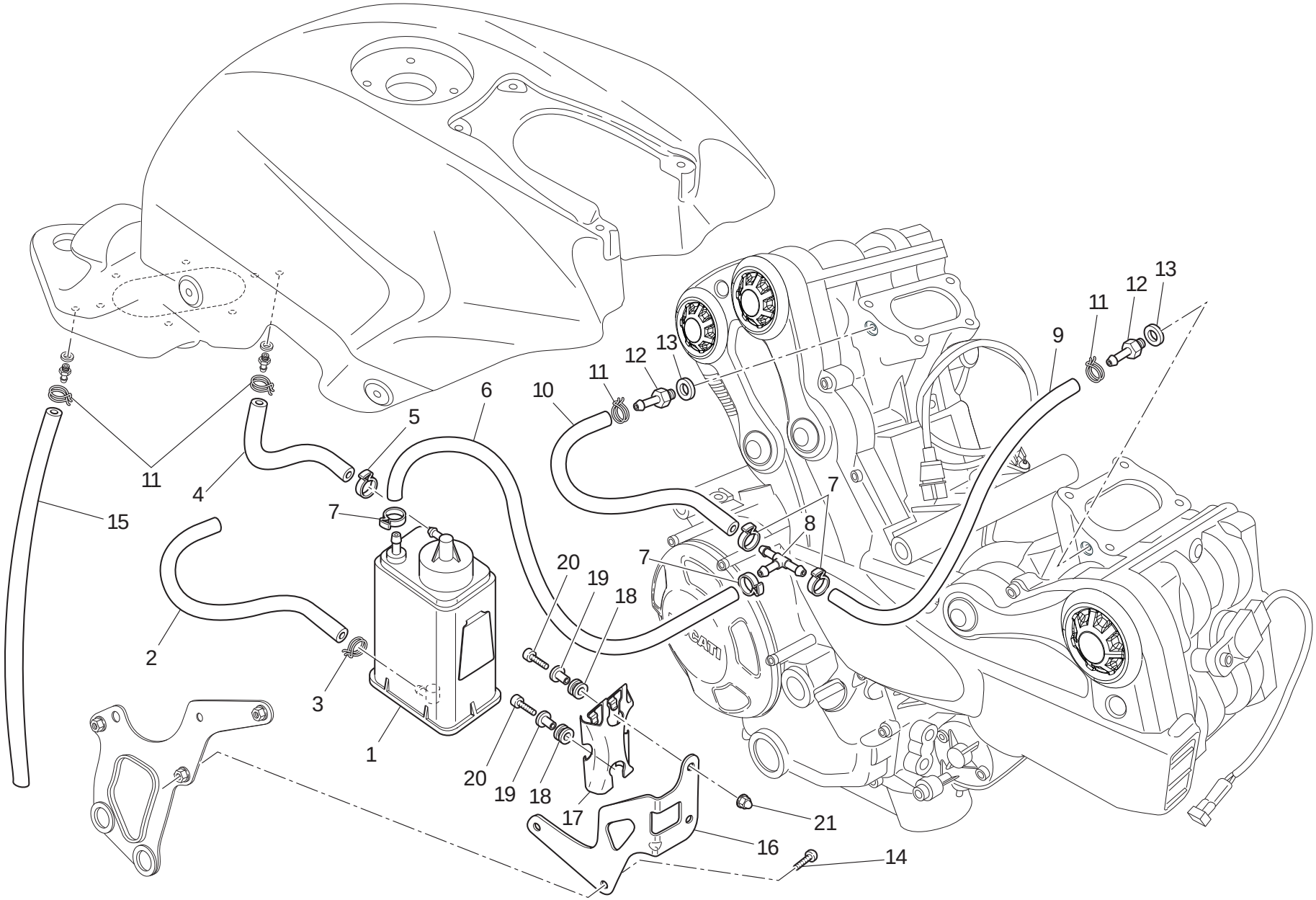

DRAWING 035 Evaporative emissions canister

NOTES NO.	CODE NO.	DESCRIPTION	VALIDITY	Q.TY
1	426.1.007.1B	Canister filter		1
2	590.1.245.1A	Tube 7x13x335		1
3	741.4.057.1A	Hose guide		1
4	590.1.307.1B	Tube		1
5	741.4.063.1A	Hose guide		1
6	590.1.350.1A	Tube		1
7	741.4.058.1A	Clamp		4
8	814.1.183.1A	Union "T"		1
9	590.1.348.1A	Tube		1
10	590.1.349.1A	Tube		1
11	741.4.043.1A	Hose guide		4
12	814.1.111.3B	Union		2
13	852.5.023.1A	Gasket		2
14	775.5.021.1A	Screw		2
15	590.1.351.1A	Tube		1
16	830.1.465.1A	Bracket		1
17	827.1.157.1A	Plate		1
18	764.1.029.1A	Rubber pad		2
19	716.1.043.1C	Spacer		2
20	771.5.064.8B	Screw		2
21	749.1.002.1A	Special nut		2

NOTES NO.	CODE NO.	DESCRIPTION	VALIDITY	Q.TY

CATALOGUE No: 915.1.290.1F
ISSUED: 10 - 11

DRAWING 036 Data plate positions

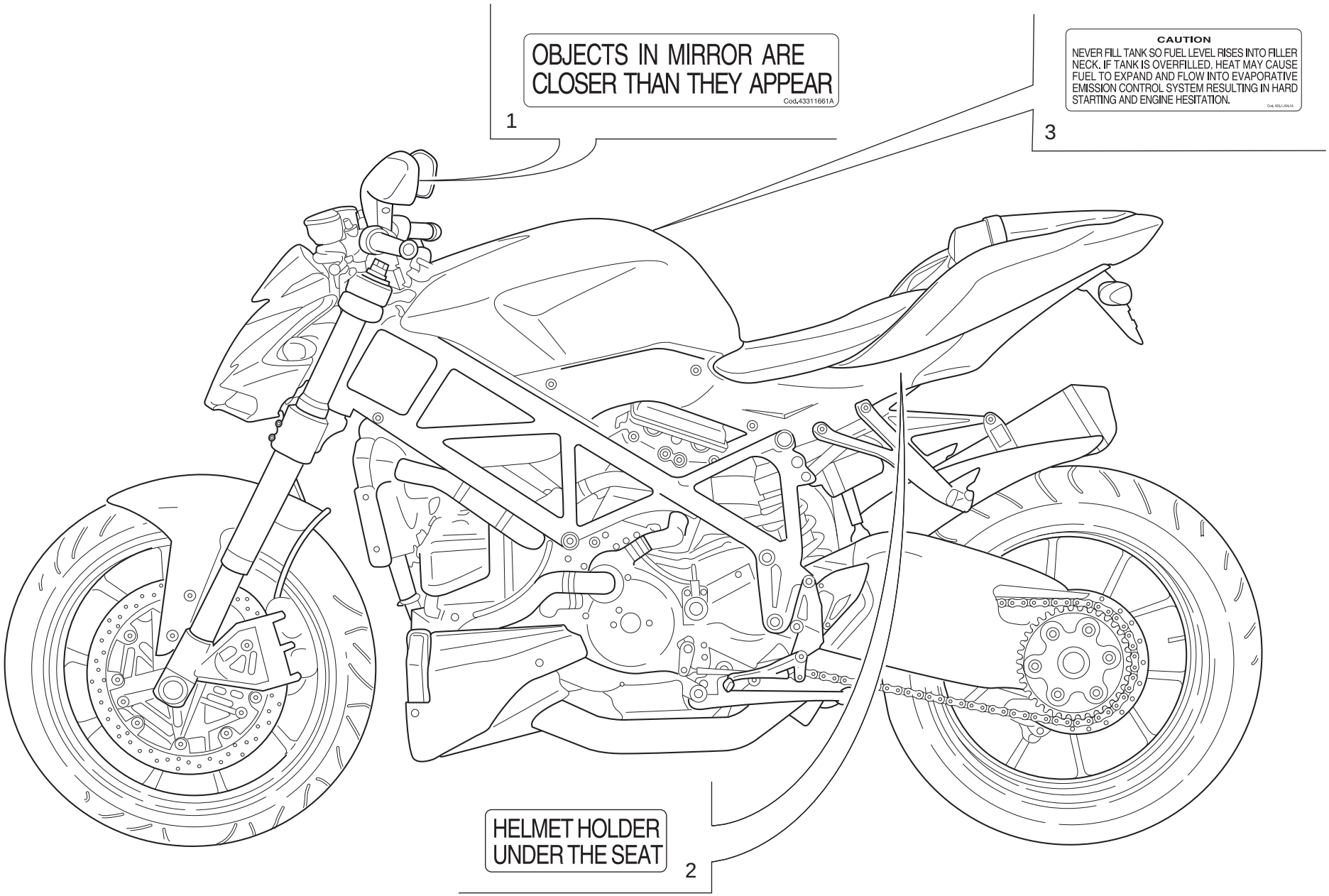

DRAWING 036 Data plate positions

NOTES NO.	CODE NO.	DESCRIPTION	VALIDITY	Q.TY
1	433.1166.1A	Label		2
2	433.1170.1A	Sticker		1
3	433.1164.1A	Sticker		1

NOTES NO.	CODE NO.	DESCRIPTION	VALIDITY	Q.TY

Index

CODE No.	Drwg.	POS. N.	CODE No.	Drwg.	POS. N.	CODE No.	Drwg.	POS. N.	CODE No.	Drwg.	POS. N.	CODE No.	Drwg.	POS. N.
.....	014	1	117.1.044.1A	025	18	162.1.001.1C	004	7	198.Z.001.1A	004	13	247.2.342.4CG	033	10
.....	014	2	117.1.088.2A	022	8	170.Z.004.1A	004	17	208.1.032.1A	014	3	251.2.008.1A	011	29
.....	015	1	117.2.112.1A	004	22	171.Z.003.1A	008	13	208.1.032.1A	015	3	254.4.001.2A	005	4
.....	015	2	120.Z.003.1B	007	5	172.1.002.1B	003	10	209.1.049.1A	014	16	255.1.010.4B	008	18
0251.47.054	003	1	120.Z.004.1B	007	10	172.1.003.3C	003	8	209.1.049.1A	015	16	255.1.019.3A	013	7
0272.91.090	002	8	121.1.078.1B	007	3	172.1.004.3C	003	5	209.1.050.1A	014	4	264.4.061.1A	011	1
0370.49.250	010	22	121.1.079.1A	007	2	172.1.005.3C	003	9	209.1.050.1A	015	4	270.4.010.3A	012	1
0370.72.020	023	8	121.2.051.2A	007	4	172.1.008.1C	003	22	210.1.072.1A	014	14	276.Z.001.1A	012	16
0370.72.020	024	12	122.2.167.2A	007	1	172.1.009.1C	003	21	210.1.072.1A	015	14	280.4.016.1A	017	13
0400.09.050	002	21	135.1.023.2A	017	7	172.1.010.3C	003	20	211.1.070.1B	014	5	282.4.079.3B	017	11
0400.29.125	002	31	140.1.048.1B	017	1	172.1.011.3C	003	23	211.1.070.1B	015	5	283.4.024.1A	017	15
0400.29.126	002	31	146.2.143.1B	006	1	172.1.218.2A	003	18	225.2.249.2B	010	1	286.1.117.1E	018a	4
0660.13.143	002	9	147.1.014.2A	008	3	172.1.219.2A	003	24	242.2.088.1BC	011	13	286.2.040.1B	018a	6
0660.13.165	002	25	148.2.306.1C	013	15	173.Z.002.1A	012	14	243.2.115.1BE	005	21	286.4.186.1C	018	13
0660.16.145	004	21	148.2.307.1C	013	11	174.Z.002.1A	009	1	243.2.125.1B	005	1	286.4.186.1D	018	13
0665.49.680	005	22	148.2.308.1C	013	14	176.Z.002.1A	012	10	245.1.108.1A	008	2	287.4.024.1B	032a	13
0670.16.145	003	7	148.2.309.1C	013	18	180.1.008.1A	002	24	245.1.109.1A	008	1	301.2.238.6BB	015	22
0670.16.150	003	3	149.1.061.1A	003	25	180.Z.003.1A	002	11	245.2.107.1A	008	29	301.2.239.6BB	014	22
0670.16.155	003	19	150.2.092.3A	003	28	180.Z.004.1A	002	12	247.1.287.1B	013	5	303.1.063.1BB	014	7
0670.16.170	003	26	150.2.105.1A	003	2	182.Z.001.1A	002	18	247.1.288.1B	013	6	303.1.063.1BB	015	7
0670.49.310	009	17	150.2.106.1A	003	27	184.1.010.2A	025	20	247.1.290.1AB	009	19	303.1.063.1BC	014	7
0691.91.030	018a	17	158.2.020.3A	006	5	187.1.002.1A	023	3	247.1.305.1AF	011	23	303.1.063.1BC	015	7
0759.49.280	009	15	160.1.094.1A	013	10	187.1.002.1A	024	22	247.1.333.1A	027a	13	303.1.063.1BD	014	7
0765.92.205	002	21	160.1.367.4A	019	37	190.2.020.2A	004	8	247.1.335.1A	020	26	303.1.063.1BD	015	7
0799.13.110	002	27	160.1.420.1A	026a	5	194.2.043.1A	004	12	247.1.345.1A	027a	20	304.1.086.1A	014	13
112.1.012.1AB	006	8	160.2.366.1A	032a	11	195.4.003.1C	004	29	247.2.130.1AC	011	31	304.1.086.1A	015	13
112.1.012.1AC	006	8	160.Z.001.1A	012	13	196.1.001.1D	004	10	247.2.342.4AA	033	10	304.1.086.1AB	014	13

CATALOGUE No: 915.1.290.1F
ISSUED: 10 - 11

Index

CODE No.	Drwg.	POS. N.	CODE No.	Drwg.	POS. N.	CODE No.	Drwg.	POS. N.	CODE No.	Drwg.	POS. N.	CODE No.	Drwg.	POS. N.
304.1.086.1AB	015	13	389.4.022.1A	018a	5	438.1.365.1AK	032	14	462.4.046.1A	019	39	484.2.075.1B	029	3
304.1.086.1AC	014	13	389.4.024.1A	018a	5	438.1.474.1A	034	9	463.2.022.2A	010	12	484.2.076.1B	029	21
304.1.086.1AC	015	13	389.4.025.1A	018	19	438.1.610.1A	033	19	463.2.053.7A	003	14	486.1.081.1A	032	15
304.1.087.1A	014	10	390.4.016.2A	027a	14	442.1.139.3B	029	7	463.2.053.7A	004	15	486.1.082.1A	005	23
304.1.087.1A	015	10	390.4.021.1A	020	10	442.1.184.1A	029	15	464.1.055.1A	022	12	492.1.004.1A	026a	19
304.1.087.1AB	014	10	390.4.021.1A	027a	4	444.4.003.5A	009	20	464.1.055.1A	027	6	492.4.089.1A	026	12
304.1.087.1AB	015	10	390.4.026.1A	020	20	447.1.079.2A	028a	15	464.1.056.1A	022	5	492.4.102.1A	026	5
304.1.087.1AC	014	10	390.4.027.1A	020	21	447.1.095.1A	028a	17	464.1.056.1A	027	13	494.1.133.1A	026a	10
304.1.087.1AC	015	10	390.4.029.1A	020	22	449.1.053.1A	003	12	470.1.213.2AA	022	1	497.2.001.2A	026	3
341.2.071.1A	021	23	391.1.003.3A	027a	26	451.1.017.1A	008	22	470.1.705.1AA	027	1	497.2.003.1A	026	16
342.2.057.1A	021	3	395.2.013.1C	018	23	451.1.018.2A	008	9	480.1.536.1A	032	17	501.2.115.1AB	026	10
344.2.017.1B	021a	1	397.4.007.1A	018	18	451.1.043.1A	008	16	480.1.544.1A	032	7	502.2.125.1AB	026	7
345.2.017.1B	021a	2	406.1.097.1A	020	27	451.1.046.1A	008	4	480.2.270.1AA	034	16	510.1.570.1A	018a	20
349.2.039.1A	021a	4	417.6.011.3A	014	20	451.1.047.1A	008	25	480.2.271.1AA	034	10	510.1.694.1C	018a	1
349.2.040.1A	021a	5	420.2.000.8A	025	36	455.2.003.1A	002	4	480.2.280.1CG	034	16	510.1.776.1A	018a	2
360.1.100.1A	021	31	420.2.006.4A	016	5	456.1.046.1B	022	20	480.2.281.1CG	034	10	514.1.062.1A	018	15
360.1.102.1A	021	24	425.4.004.1B	032a	14	456.1.203.1A	022	19	481.2.056.1AA	034	7	514.1.063.1A	018	22
360.1.136.1AA	021	16	426.1.007.1B	035	1	457.1.047.1A	025	6	481.2.056.1CG	034	7	516.4.004.2B	018a	18
364.2.009.1A	021	29	426.1.020.1A	029	24	460.1.255.1A	026a	14	482.1.156.1A	033	30	518.4.005.1B	021	37
365.2.075.2A	028	10	433.1.164.1A	036	3	460.1.275.1A	019	38	482.1.157.1A	033	31	520.1.018.2A	020	12
369.2.123.3A	028a	1	433.1.166.1A	036	1	460.1.286.2B	019	2	483.1.076.1A	033	17	523.4.022.2A	021	8
370.2.114.1BA	028a	8	433.1.170.1A	036	2	460.1.293.1A	019	26	483.1.081.3A	033	9	523.4.023.2A	021	9
372.2.062.2A	028	8	433.1.352.1A	028a	20	460.1.331.1A	022	11	483.2.075.1AA	033	12	525.1.037.2A	027a	22
380.1.014.5B	018a	11	438.1.081.1A	033	19	460.1.366.1AB	030	5	483.2.075.1CG	033	12	529.1.001.2A	021a	6
389.4.019.1A	018a	5	438.1.087.1A	034	8	460.1.367.1AB	030	11	483.3.082.1B	033	7	529.1.010.1A	027a	9
389.4.020.1A	018a	5	438.1.088.1A	034	8	460.1.405.1A	019	45	484.1.077.1B	029	5	530.1.022.4A	020	9
389.4.021.1A	018a	5	438.1.365.1AA	032	14	460.2.359.1A	019	36	484.1.078.1B	029	23	530.1.022.4A	027a	3

CATALOGUE No: 915.1.290.1F
ISSUED: 10 - 11

Index

CODE No.	Drwg.	POS. N.	CODE No.	Drwg.	POS. N.	CODE No.	Drwg.	POS. N.	CODE No.	Drwg.	POS. N.	CODE No.	Drwg.	POS. N.
530.1.023.4A	020	24	564.2.079.1B	034	3	598.1.013.1A	033	20	631.4.016.1A	025	25	699.2.633.1A	032	5
530.1.023.4A	027a	21	565.1.044.1B	028a	21	598.2.061.1A	033	22	631.4.028.1A	023	20	700.1.036.1A	012	12
539.1.021.1B	002	6	570.1.259.1B	019	11	598.2.100.1A	032	16	631.4.028.1A	024	31	700.1.048.1B	020	13
539.1.030.1A	022a	5	570.1.274.1C	019	24	598.4.029.1A	021	18	631.4.033.1A	024	2	700.1.054.1A	021	10
539.4.003.1B	025	5	571.1.260.2A	019	14	598.4.034.1A	021	39	631.4.034.1A	023	2	700.1.057.1A	026a	9
539.4.030.2A	005	9	573.1.116.1B	019	28	610.4.090.1C	024	9	632.4.054.1A	023	6	700.1.060.1A	033	37
539.4.035.1A	024	5	585.1.064.1A	031	1	610.4.091.1C	024	26	650.1.009.2I	021	25	700.1.063.1A	021	27
539.4.036.1A	023	21	585.4.001.1A	025	26	611.4.029.1A	025	29	651.1.011.2C	021	14	701.4.004.1A	028	7
540.4.019.1A	018	3	585.4.010.1A	023	12	612.4.005.1A	023	4	652.4.021.1A	021	30	701.4.005.1A	003	4
541.4.010.1A	018a	3	585.4.011.1A	024	15	612.4.005.1A	024	21	654.2.016.1A	021	20	701.4.017.1A	028a	6
547.1.001.1A	016	6	586.1.186.1AA	032	1	612.4.008.1A	025	31	656.2.097.1A	021	26	701.4.035.1A	012	11
548.4.083.1A	030	1	586.1.186.1CG	032	1	612.4.016.1A	025	14	668.1.001.4A	007	14	702.4.009.1A	011	11
548.4.084.1A	030	2	587.1.051.2A	032	2	612.4.037.1A	024	30	668.1.001.4A	011	16	702.4.010.2A	011	9
549.1.090.1A	016	3	587.1.052.2A	032	3	613.4.038.1A	025	30	668.4.001.1A	031	21	702.4.013.1A	010	19
549.1.091.1A	016	4	590.1.245.1A	035	2	613.4.090.1A	024	8	669.1.001.1E	014	6	702.4.017.1A	004	20
550.4.020.1A	030	4	590.1.307.1B	035	4	618.4.075.1B	024	20	669.1.001.1E	015	6	702.4.018.1A	012	15
552.1.111.1A	019	12	590.1.348.1A	035	9	618.4.116.1A	024	19	670.4.038.1A	018a	12	702.4.020.1A	010a	11
552.4.012.1A	020	29	590.1.349.1A	035	10	619.4.042.2B	025	28	676.2.074.1A	026a	1	702.4.033.1A	010	21
552.4.013.1A	031	9	590.1.350.1A	035	6	624.4.057.2A	024	1	676.4.074.1A	026a	8	702.4.033.1A	010a	2
552.4.037.2E	024	35	590.1.351.1A	035	15	625.4.018.1B	025	16	677.4.012.1A	026a	22	702.4.058.1A	008	10
552.4.037.3E	025	34	590.1.360.1A	032a	8	626.4.056.1A	023	18	680.1.013.1A	006	10	702.4.123.1A	021	6
552.4.048.2A	032a	9	590.1.362.1A	032a	15	626.4.056.1A	024	7	680.1.013.1A	008	12	702.5.008.1A	010	6
552.4.132.1B	010	2	590.2.025.4A	017	20	626.4.066.1A	023	19	680.5.006.1A	013	12	702.5.008.1A	011	4
553.4.004.1A	031	19	593.2.042.1A	010	11	626.4.067.1A	024	24	684.1.073.1A	030	17	702.5.019.1A	010a	1
556.1.062.1AB	022a	3	593.4.039.2A	018	10	630.4.048.2A	023	1	696.1.012.1A	027	15	702.5.044.1A	003	29
556.2.063.1AA	022a	1	595.1.100.2A	033	1	631.4.008.1A	023	22	697.2.025.2A	033	15	702.5.045.1A	026	8
561.1.027.1A	027a	8	595.1.101.2A	033	16	631.4.008.1A	024	6	699.2.345.1A	032a	12	702.5.045.1A	028a	10

CATALOGUE No: 915.1.290.1F
ISSUED: 10 - 11

Index

CODE No.	Drwg.	POS. N.	CODE No.	Drwg.	POS. N.	CODE No.	Drwg.	POS. N.	CODE No.	Drwg.	POS. N.	CODE No.	Drwg.	POS. N.
702.5.051.1A	004	18	713.1.196.1A	026	17	716.1.072.2A	008	20	737.4.025.1A	008	5	741.4.198.1A	031	6
702.5.053.1A	004	14	713.1.197.3A	026	2	716.1.128.1A	008	17	741.1.012.1A	018a	23	747.5.001.1AB	022	29
703.1.013.1A	021	12	713.1.210.1A	021	41	716.1.143.1A	029	18	741.1.040.1A	018a	7	747.5.003.1A	021	1
703.5.002.2A	013	2	713.1.239.1A	028	2	716.1.144.1A	018	5	741.1.047.1A	019	30	747.5.003.1A	025	15
703.5.006.2A	008	21	713.1.266.1A	003	15	716.1.144.1A	019	22	741.1.048.2A	019	44	747.5.010.1A	022	23
70610.8120	004	11	713.1.292.1A	014	9	716.1.154.1A	027a	1	741.4.001.1A	031	7	748.1.024.1A	019	3
710.1.061.1A	006	7	713.1.292.1A	015	9	716.1.155.1A	027a	2	741.4.004.1A	031	30	748.1.035.1B	019	25
710.1.109.1A	028a	4	713.1.330.1A	032	11	716.1.401.1A	018	25	741.4.038.1A	018a	15	748.1.036.1A	019	1
710.1.125.1A	010	28	713.1.364.1A	024	32	716.1.401.1A	028a	22	741.4.038.1A	025	7	748.1.040.1A	002	23
710.1.126.1A	010a	21	713.1.393.1A	003	13	716.1.407.1A	029	25	741.4.043.1A	023	14	748.1.046.1A	026a	4
710.1.127.1A	004	23	713.1.393.3A	004	5	716.1.412.1A	016	14	741.4.043.1A	024	16	748.1.050.1A	010	14
710.1.132.1A	028	11	713.1.409.1A	008	24	716.1.412.1A	019	43	741.4.043.1A	025	17	748.1.065.1A	026	1
711.1.089.1A	006	6	713.1.436.1A	019	34	716.1.412.1A	021	43	741.4.043.1A	035	11	748.4.002.1A	022	2
711.1.095.1A	010a	7	713.1.458.2A	020	35	716.1.414.1A	019	18	741.4.057.1A	035	3	748.4.024.1AB	021	11
711.1.160.1A	005	13	713.1.459.2A	020	34	716.1.418.1A	027a	24	741.4.058.1A	035	7	748.4.037.1AB	028	3
711.1.160.1A	011	14	713.1.470.2A	027a	5	716.1.419.1A	030	8	741.4.063.1A	029	12	748.5.006.1A	033	39
711.1.219.1A	007	12	713.1.915.1A	002	29	716.1.422.1A	019	7	741.4.063.1A	035	5	749.1.002.1A	035	21
712.1.029.1A	028a	9	713.1.919.1A	012	9	716.1.428.1A	018	28	741.4.130.1A	031	25	749.4.002.1A	021	32
712.1.030.1A	028a	12	713.1.924.1A	027a	11	72094.1616	010	17	741.4.156.1A	031	23	749.4.004.1A	022	21
712.1.034.1A	022	17	713.1.926.1A	004	27	732.1.017.1A	033	40	741.4.165.1A	029	22	749.4.008.1A	008	7
712.1.034.1A	025	10	714.1.047.1A	026	9	732.2.028.1A	019	20	741.4.186.1A	029	20	749.4.031.1A	019	15
713.1.014.1E	003	11	714.1.075.1A	026a	12	73500.1542	002	15	741.4.189.1A	017	21	749.4.031.1A	033	24
713.1.128.1B	011	27	714.1.323.1AA	026	15	73500.2054	008	27	741.4.190.1A	030	14	749.4.112.8B	019	31
713.1.140.1A	010a	4	715.1.003.1A	028	5	73503.3380	010	9	741.4.190.1A	031	5	749.4.112.8B	027	3
713.1.187.1A	028a	11	716.1.003.1A	016	10	73503.3380	010a	10	741.4.192.1A	007	7	750.1.007.1A	003	32
713.1.192.1A	024	34	716.1.003.1A	034	21	73503.3380	011	17	741.4.192.1A	031	24	750.1.012.1D	006	14
713.1.192.1A	025	33	716.1.043.1C	035	19	73503.3804	008	26	741.4.193.1A	020	33	750.1.021.1A	028	12

CATALOGUE No: 915.1.290.1F
ISSUED: 10 - 11

Index

CODE No.	Drwg.	POS. N.	CODE No.	Drwg.	POS. N.	CODE No.	Drwg.	POS. N.	CODE No.	Drwg.	POS. N.	CODE No.	Drwg.	POS. N.
750.1022.1A	028	15	764.1022.1A	030	6	771.1043.1A	022a	2	771.5.069.3B	011	19	771.5.721.3B	027	12
750.1045.1A	004	25	764.1022.1A	034	20	771.1043.1A	025	2	771.5.069.8B	009	10	771.5.723.8B	025	32
750.1048.1A	022a	10	764.1029.1A	035	18	771.1044.1A	032a	7	771.5.071.3B	011	36	771.5.725.8B	019	29
750.1057.1A	006	13	764.1050.1A	022	26	771.1046.1A	021	44	771.5.071.8B	011	15	771.5.725.8B	021	7
750.1121.1A	012	3	764.1051.1A	022	25	771.1049.1A	012	5	771.5.072.3B	010a	14	771.5.727.8B	021	13
750.1139.1A	026	13	764.1054.1A	033	25	771.1052.1A	012	6	771.5.078.3B	005	3	771.5.727.8B	021a	3
750.1139.1A	026a	2	764.1064.1A	019	19	771.1226.1A	029	19	771.5.079.3B	005	11	771.5.728.8B	032	13
750.1155.1A	033	14	764.1064.1A	020	1	771.1229.1A	018a	21	771.5.080.8B	010a	15	771.5.938.8B	028	9
750.1160.1A	008	15	764.1087.1A	014	8	771.1233.1A	017	6	771.5.125.0Z	002	30	771.5.940.8B	021	34
750.5.001.1B	018	2	764.1087.1A	015	8	771.1369.1A	018	12	771.5.129.8B	009	8	772.1042.2A	029	6
750.5.001.1B	020	14	764.1090.1A	027a	18	771.1369.1A	027	5	771.5.136.3B	010a	22	772.1046.1B	018	16
75191.3380	010	4	764.1090.1A	029	17	771.1373.1A	021	19	771.5.139.8B	010	10	772.1047.1B	030	15
756.2.013.1A	026a	13	764.1097.1A	020	30	771.1374.1A	021	17	771.5.139.8B	010a	17	772.1050.1C	018a	19
75794.1542	010a	9	764.1.105.1A	019	42	771.1378.1A	005	8	771.5.639.8B	018	4	772.1050.1C	032	4
758.1032.1A	020	11	764.1.130.1B	018	9	771.1379.1A	005	2	771.5.639.8B	027a	29	772.1059.1A	030	16
758.1036.1A	029	8	76402.0002	003	17	771.1380.1A	008	6	771.5.640.8B	019	21	772.1059.1A	031	3
758.1039.2A	017	18	766.1055.3B	010	16	771.5.043.8B	004	4	771.5.640.8B	032	9	772.1060.1A	009	16
758.4.017.1A	017	3	766.4.019.1A	014	21	771.5.064.8B	011	5	771.5.645.8B	018	8	772.1061.1A	020	6
758.4.060.1A	024	38	766.4.019.1A	015	21	771.5.064.8B	030	12	771.5.651.8B	020	7	772.1061.1A	030	21
759.1022.2A	026	19	76835.1134	002	10	771.5.064.8B	035	20	771.5.661.8B	019	27	772.1062.3B	031	15
759.1022.2A	026a	20	770.5.250.8B	010a	5	771.5.065.2BB	004	28	771.5.662.8B	018	21	772.1063.1A	025	19
764.1001.1A	019	33	770.5.250.8B	011	6	771.5.065.8B	017	2	771.5.663.8B	019	47	772.1077.2AB	022	7
764.1001.1A	032	10	771.1019.1A	022	30	771.5.066.3B	011	20	771.5.665.8B	024	36	772.1078.2A	028a	3
764.1003.2B	004	6	771.1031.1A	028	1	771.5.066.3B	018a	9	771.5.665.8B	025	35	772.1084.1A	033	5
764.1011.2A	022	18	771.1039.1A	020	5	771.5.067.0Z	002	28	771.5.667.8B	022	14	772.1085.2A	017	8
764.1011.2A	025	12	771.1039.1A	021	28	771.5.067.3B	011	3	771.5.668.8B	016	9	772.1085.3B	032	18
764.1022.1A	016	11	771.1039.1B	026a	11	771.5.069.3B	005	5	771.5.672.8B	018	14	772.1085.3B	033	6

CATALOGUE No: 915.1.290.1F
ISSUED: 10 - 11

Index

CODE No.	Drwg.	POS. N.	CODE No.	Drwg.	POS. N.	CODE No.	Drwg.	POS. N.	CODE No.	Drwg.	POS. N.	CODE No.	Drwg.	POS. N.
772.1.086.1B	029	26	773.5.061.8B	010a	13	779.1.092.1A	023	7	779.1.504.1A	028	4	790.1.015.1A	019	4
772.1.087.3AB	027	2	773.5.062.3B	023	10	779.1.092.1A	024	13	779.1.509.3A	013	3	791.1.067.1A	029	16
772.1.088.2C	028a	24	773.5.062.3B	024	10	779.1.109.2A	006	2	779.1.547.1A	006	4	791.2.044.1A	007	6
772.1.089.3B	016	8	773.5.062.8B	025	24	779.1.162.2A	009	13	779.1.591.1A	021	38	799.1.024.1A	027	10
772.1.089.3B	019	8	773.5.487.8B	028a	13	779.1.187.1A	008	23	779.1.605.1A	034	14	799.1.049.1A	002	1
772.1.089.3B	034	1	773.5.506.8B	019	35	779.1.202.1C	030	3	779.1.618.1A	034	17	799.1.158.1B	022a	6
772.1.101.1B	027a	12	774.4.004.1A	020	19	779.1.203.3A	002	7	779.1.675.1A	011	2	799.1.166.1B	022	3
772.1.102.1A	034	12	774.4.006.1A	027a	28	779.1.237.1B	025	8	779.4.005.2A	022a	4	799.1.175.1A	033	33
772.1.104.1A	033	36	775.1.017.1C	017	12	779.1.298.1A	021	2	779.5.030.2A	013	16	799.1.253.1A	004	1
772.1.109.1A	029	1	775.1.031.1B	010	25	779.1.331.1D	024	25	779.5.062.1A	010a	12	799.1.256.1A	025	4
772.1.109.1A	033	26	775.1.031.1B	010a	20	779.1.366.1AB	023	16	780.1.007.1A	019	9	799.1.263.2A	019	13
772.1.109.1A	034	19	775.1.033.1A	020	17	779.1.366.1AB	025	22	780.1.051.2A	014	12	799.1.482.1A	002	20
772.1.109.1C	033	13	775.1.045.1A	027a	23	779.1.397.1A	023	5	780.1.051.2A	015	12	799.1.485.1A	014	19
772.1.110.1A	017	14	775.1.051.1A	032a	3	779.1.397.1A	024	23	780.1.072.1A	010a	6	799.1.485.1A	015	19
772.4.025.3C	019	40	775.1.051.1B	022	6	779.1.399.1A	026	4	780.5.001.2A	005	15	799.1.486.1A	014	18
772.4.026.3C	034	11	775.1.051.1B	034	4	779.1.404.3B	006	9	780.5.001.2A	011	33	799.1.486.1A	015	18
772.4.044.3C	034	22	775.1.054.1A	024	29	779.1.415.1A	024	3	786.1.092.2A	007	11	799.2.077.2A	009	14
772.4.046.3C	030	9	775.1.054.1A	030	7	779.1.421.1A	014	23	786.1.094.1A	007	13	799.2.159.1B	022a	7
772.4.046.3C	034	2	775.5.001.3C	020	25	779.1.421.1A	015	23	787.1.011.1A	016	1	799.4.009.1A	019	23
772.4.048.3C	030	22	775.5.013.1A	027a	7	779.1.440.1B	028a	16	788.1.054.2A	012	4	800.1.169.1A	031	18
772.5.034.1C	008	30	775.5.021.1A	010	29	779.1.465.1A	024	28	788.1.083.1A	019	32	800.1.170.2A	030	13
772.5.038.1AB	019	17	775.5.021.1A	035	14	779.1.484.2B	022	24	788.1.093.1A	013	9	800.1.171.3A	031	13
772.5.101.8B	027a	15	775.5.025.1A	032	19	779.1.488.1A	026a	21	788.1.094.1A	013	8	800.1.172.2A	031	16
773.1.002.1A	021	46	777.5.049.3C	011	24	779.1.498.1A	033	21	788.1.096.2A	017	9	800.1.173.1A	031	17
773.1.005.1A	017	19	778.4.004.1A	009	2	779.1.499.2A	033	27	788.1.097.2A	017	10	800.1.174.3A	007	8
773.1.005.1A	029	9	779.1.026.2A	011	10	779.1.501.1A	005	24	788.1.098.1A	029	4	800.1.175.2A	007	9
773.5.039.3B	027a	19	779.1.039.1A	002	3	779.1.503.1A	028a	18	788.1.106.3A	005	14	800.1.176.1A	031	26

CATALOGUE No: 915.1.290.1F
ISSUED: 10 - 11

CATALOGUE No: 915.1.290.1F
ISSUED: 10 - 11

Index

CODE No.	Drwg.	POS. N.	CODE No.	Drwg.	POS. N.	CODE No.	Drwg.	POS. N.	CODE No.	Drwg.	POS. N.	CODE No.	Drwg.	POS. N.
800.1.177.2A	031	22	821.1.223.1B	014	15	829.1.981.1A	027a	6	840.1.001.1A	14/15	1	840.1.028.1A	14/15	1
8000.53724	018a	16	821.1.223.1B	015	15	829.1.982.1A	020	15	840.1.002.1A	14/15	1	840.1.029.1A	14/15	1
8000.56443	023	13	821.1.268.1A	002	13	829.1.983.1A	020	23	840.1.003.1A	14/15	1	840.1.030.1A	14/15	1
8000.56443	024	18	821.1.273.1A	025	13	829.1.984.1A	025	1	840.1.004.1A	14/15	1	840.1.031.1A	14/15	1
808.1.118.1A	021	42	821.1.347.1A	012	8	829.1.985.3A	018	6	840.1.005.1A	14/15	1	840.1.032.1A	14/15	1
814.1.111.3B	035	12	824.1.154.1A	022	28	829.1.A68.2AA	018	7	840.1.006.1A	14/15	1	840.1.033.1A	14/15	1
814.1.179.1A	032a	2	824.1.155.1A	022	9	829.2.766.1A	030	10	840.1.007.1A	14/15	1	840.1.034.1A	14/15	1
814.1.183.1A	035	8	824.1.156.1A	027	8	830.1.235.1A	011	35	840.1.008.1A	14/15	1	840.1.041.2B	14/15	2
814.1.188.1A	015	25	824.1.157.1A	027	9	830.1.411.1A	020	28	840.1.009.1A	14/15	1	840.1.042.2B	14/15	2
814.1.236.1C	031	11	825.1.036.2A	026a	17	830.1.416.1A	020	2	840.1.010.1A	14/15	1	840.1.043.2B	14/15	2
814.1.311.1A	029	13	826.1.012.1A	010	18	830.1.441.1A	031	4	840.1.011.1A	14/15	1	840.1.044.2B	14/15	2
814.1.326.1A	031	14	826.1.029.2A	002	16	830.1.465.1A	035	16	840.1.012.1A	14/15	1	840.1.045.2B	14/15	2
814.1.327.1A	031	27	827.1.157.1A	035	17	830.1.477.1A	024	37	840.1.013.1A	14/15	1	840.1.046.2B	14/15	2
814.4.010.1A	032a	10	827.1.433.1A	005	25	830.1.479.1A	024	27	840.1.014.1A	14/15	1	840.1.047.2B	14/15	2
815.1.022.1A	016	2	827.1.482.1A	033	18	830.1.494.1B	008	28	840.1.015.1A	14/15	1	840.1.048.2B	14/15	2
815.1.028.1A	009	12	827.1.493.1A	020	8	830.1.494.1B	034	5	840.1.016.1A	14/15	1	840.1.049.2B	14/15	2
818.2.009.1A	004	3	827.1.530.1A	034	15	830.1.527.1A	021	33	840.1.017.1A	14/15	1	840.1.050.2B	14/15	2
819.1.060.1A	026	11	827.1.531.1A	034	13	830.1.530.1A	016	7	840.1.018.1A	14/15	1	840.1.051.2B	14/15	2
819.Z.002.1A	026a	6	827.1.538.1A	020	31	830.1.543.1A	027	4	840.1.019.1A	14/15	1	840.1.052.2B	14/15	2
821.1.001.1A	002	26	827.1.543.1A	017	4	830.1.548.3A	027a	27	840.1.020.1A	14/15	1	840.1.053.2B	14/15	2
821.1.051.1AB	022	4	827.1.544.1A	020	3	830.1.549.1A	018	17	840.1.021.1A	14/15	1	840.1.054.2B	14/15	2
821.1.051.1AB	027	7	827.1.648.1AA	032	20	830.1.550.1A	018	26	840.1.022.1A	14/15	1	840.1.055.2B	14/15	2
821.1.103.2A	022a	9	829.1.260.2A	022a	8	830.1.554.1A	032a	5	840.1.023.1A	14/15	1	840.1.056.2B	14/15	2
821.1.170.1B	022	13	829.1.974.1A	020	16	830.1.555.1A	032a	4	840.1.024.1A	14/15	1	840.1.057.2B	14/15	2
821.1.170.1B	025	9	829.1.978.1A	023	9	830.1.556.1A	018	27	840.1.025.1A	14/15	1	840.1.058.2B	14/15	2
821.1.222.1B	014	17	829.1.979.1A	024	11	830.1.564.1A	033	23	840.1.026.1A	14/15	1	840.1.059.2B	14/15	2
821.1.222.1B	015	17	829.1.980.1A	027a	16	832.1.003.1C	028a	14	840.1.027.1A	14/15	1	840.1.060.2B	14/15	2

CATALOGUE No: 915.1.290.1F
ISSUED: 10 - 11

Index

CODE No.	Drwg.	POS. N.	CODE No.	Drwg.	POS. N.	CODE No.	Drwg.	POS. N.	CODE No.	Drwg.	POS. N.	CODE No.	Drwg.	POS. N.
840.1061.2B	14/15	2	841.1.037.1A	033	34	851.1.010.1A	006	12	852.1.151.1A	025	3	852.5.023.1A	011	30
840.1062.2B	14/15	2	841.1.050.1A	028a	19	851.1.013.1A	008	14	852.1.160.1B	018	11	852.5.023.1A	015	20
840.1063.2B	14/15	2	841.1.051.1B	004	2	851.4.006.1A	021	22	852.1.172.1A	009	11	852.5.023.1A	035	13
840.1064.2B	14/15	2	847.4.002.1A	027	11	852.1.005.1A	002	14	852.1.172.1A	011	7	852.5.024.1A	002	5
840.1065.2B	14/15	2	848.2.002.1A	021	4	852.1.049.1B	021	35	852.1.174.1A	008	8	852.5.024.1A	005	16
840.1066.2B	14/15	2	848.4.001.1A	021	15	852.1.053.2A	002	2	852.1.174.1A	009	9	852.5.024.1A	011	32
840.1067.2B	14/15	2	848.4.047.1A	028	13	852.1.072.1A	019	6	852.1.176.1A	016	13	852.5.024.1A	019	10
840.1068.2B	14/15	2	848.4.048.1A	028	16	852.1.094.1A	002	19	852.1.176.1A	020	4	852.5.024.1A	023	17
840.1069.2B	14/15	2	848.5.001.1A	022	16	852.1.099.1A	032	12	852.1.176.1A	031	29	852.5.024.1A	024	4
840.1070.2B	14/15	2	848.5.002.1A	022	22	852.1.104.1H	006	11	852.1.186.1A	019	16	852.5.024.1A	025	23
840.1071.2B	14/15	2	850.4.038.1A	019	46	852.1.104.1K	006	11	852.1.195.1A	005	10	852.5.026.1A	011	25
840.1072.2B	14/15	2	850.4.038.1A	030	18	852.1.104.1L	006	11	852.1.195.1A	009	7	852.5.026.1B	014	11
840.1073.2B	14/15	2	850.4.038.1A	033	11	852.1.104.1M	006	11	852.1.216.1A	028a	2	852.5.026.1B	015	11
840.1074.2B	14/15	2	850.4.043.1A	017	5	852.1.104.1N	006	11	852.1.217.1A	026a	15	852.5.027.1A	030	20
840.1075.2B	14/15	2	850.4.047.1A	020	18	852.1.104.2A	006	11	852.1.221.1A	026	14	852.5.040.1A	021	36
840.1076.2B	14/15	2	850.4.047.1A	027a	17	852.1.104.2B	006	11	852.1.221.1A	026a	3	852.5.042.1A	010	5
840.1077.2B	14/15	2	850.4.047.1A	033	4	852.1.104.2C	006	11	852.1.222.1A	026	6	853.1.003.1A	010	30
840.1078.2B	14/15	2	850.4.047.1A	034	18	852.1.104.2D	006	11	852.1.232.1A	027	16	853.1.003.1A	012	2
840.1079.2B	14/15	2	850.4.052.1A	027a	10	852.1.104.2E	006	11	852.1.250.1A	023	23	853.5.009.1A	018a	13
840.1080.2B	14/15	2	850.4.055.1A	018	1	852.1.104.2F	006	11	852.1.250.1A	024	33	853.5.010.1A	018	20
840.1081.2B	14/15	2	850.4.055.1A	032	21	852.1.104.2G	006	11	852.1.264.1A	005	26	855.4.001.1A	033	38
840.1082.2B	14/15	2	850.4.055.1A	033	28	852.1.104.2I	006	11	852.1.264.1A	018a	10	855.5.000.1B	018a	22
840.1083.2B	14/15	2	850.4.067.1A	018a	14	852.1.104.2J	006	11	852.1.269.1A	006	3	855.5.000.1B	020	32
840.1084.2B	14/15	2	850.4.124.1A	028a	25	852.1.114.1A	011	34	852.4.013.1A	017	16	856.1.001.1A	003	6
840.1085.2B	14/15	2	850.4.158.1A	019	5	852.1.135.1A	005	19	852.4.021.1A	029	10	856.1.031.1A	003	16
840.1086.2B	14/15	2	851.1.001.1B	004	9	852.1.144.1A	028a	23	852.4.173.1A	027a	25	856.1.042.1A	034	6
840.1087.2B	14/15	2	851.1.004.1A	003	31	852.1.151.1A	022	15	852.5.023.1A	010a	16	856.1.062.2A	008	19

CATALOGUE No: 915.1.290.1F
ISSUED: 10 - 11

Index

CODE No.	Drwg.	POS. N.	CODE No.	Drwg.	POS. N.	CODE No.	Drwg.	POS. N.	CODE No.	Drwg.	POS. N.	CODE No.	Drwg.	POS. N.
856.1.064.2A	010	15	877.1.138.1A	024	17	886.4.116.1A	022	27	88713.1749	001a	13	88713.2870	001a	10
856.1.074.3A	013	4	877.1.139.1A	025	21	886.4.116.1A	025	11	88713.1805	001a	3	88713.2877	001a	11
856.1.075.1A	012	17	877.2.006.1B	029	11	886.4.118.1A	004	26	88713.1806	001a	6	88713.2878	001	5
860.1.004.1A	011	21	881.1.012.1A	002	17	886.4.118.1A	010	13	88713.1821	001a	9	88713.2906	001	18
860.1.005.1B	010	26	881.1.023.1A	030	19	886.4.124.1A	026a	16	88713.1832	001	9	88713.2951	001b	11
860.5.006.1A	014	24	881.1.034.1A	012	7	886.4.132.1A	005	12	88713.1886	001	20	88713.3211	001b	5
860.5.006.1A	015	24	881.1.054.1A	026a	7	886.4.132.1A	009	5	88713.1920	001a	8	88713.3219	001a	20
860.5.025.1A	004	30	881.1.058.1A	016	12	886.4.132.1A	010	8	88713.1980	001a	16	88713.3334	001	11
866.1.030.1A	033	41	881.1.078.1A	019	41	886.4.173.1A	004	24	88713.1994	001a	17	88713.3367	001	8
866.1.098.1A	018	24	881.2.001.1A	004	19	886.5.013.1A	010	3	88713.2011	001a	7	88713.3396	001b	16
866.1.104.1A	033	2	882.1.003.1A	008	11	886.5.013.1A	010a	18	88713.2069	001a	18	88713.3497	001a	1
866.1.107.1A	033	8	884.4.025.1A	033	32	886.5.014.1A	021	40	88713.2090	001a	12	88713.3521	001a	21
866.1.108.2A	033	35	884.4.051.1A	026a	18	886.5.048.1A	032a	6	88713.2092	001	6	88765.1000	001	13
866.1.116.1A	021	45	884.5.003.1A	022	10	886.5.051.1A	013	1	88713.2102	001a	4	88765.1005	001	13
866.1.118.1A	033	3	884.5.003.1A	027	14	88700.5665	001	10	88713.2103	001	7	88765.1006	001	13
866.4.006.1A	032	6	884.5.011.1A	011	8	88700.5749	001	14	88713.2133	001	12	88765.1298	001	3
872.1.053.1A	018a	8	884.5.013.1A	005	18	88713.0869	001	15	88713.2409	001b	15	88765.1518	001a	5
872.1.054.2A	028a	7	884.5.034.1A	002	22	88713.0870	001	16	88713.2442	001	2	88765.1623	001a	14
872.1.058.1A	021	21	886.1.013.1A	032a	1	88713.0944	001	19	88713.2669	001	17	88765.1657	001	4
872.4.060.1A	031	20	886.1.024.1A	010	27	88713.1010	001a	2	88713.2676	001	1	893.1.014.3A	031	2
872.4.065.1A	027	17	886.1.095.1A	011	22	88713.1058	001b	7	88713.2834	001a	19	893.2.006.2A	010	7
873.1.005.1A	013	13	886.4.033.1A	009	4	88713.1062	001b	9	88713.2854	001b	8	893.2.013.1A	005	7
875.1.128.1A	028	14	886.4.033.1A	010	23	88713.1068	001b	2	88713.2855	001b	3	893.4.005.1A	025	27
875.1.146.1A	010	24	886.4.034.1A	009	18	88713.1071	001b	10	88713.2856	001b	13	893.4.007.1A	024	14
875.1.146.1A	010a	19	886.4.037.1A	009	6	88713.1072	001b	1	88713.2857	001b	12	893.4.008.1A	023	11
876.1.102.2B	029	2	886.4.089.1A	017	17	88713.1074	001b	4	88713.2858	001b	14	894.1.020.1A	009	3
877.1.138.1A	023	15	886.4.103.1A	031	10	88713.1515	001b	6	88713.2861	001a	15	895.2.020.1A	032	8

CATALOGUE No: 915.1.290.1F
ISSUED: 10 - 11

Index

CODE No.	Drwg.	POS. N.	CODE No.	Drwg.	POS. N.	CODE No.	Drwg.	POS. N.	CODE No.	Drwg.	POS. N.	CODE No.	Drwg.	POS. N.
8A00.67610	031	12												
913.7.189.1B	033	29												
930.1.004.1B	021	5												
930.4.002.2A	003	30												
930.4.011.1A	028	6												
930.4.021.1A	005	20												
930.4.022.1A	010	20												
930.4.034.1A	005	6												
930.4.035.1A	004	16												
930.4.052.1A	026	18												
930.4.123.1A	010a	8												
930.5.005.1A	011	26												
930.5.006.2B	011	28												
930.5.007.1A	013	17												
930.5.012.1A	028a	5												
934.1.006.1A	031	8												
934.1.010.1A	029	14												
934.1.012.3A	031	28												
93783.1524	011	18												
93823.3075	005	17												
94247.0014	010a	3												
94247.0014	011	12												
97900.0252	001c	1												
97900.0253	001c	2												
97900.0254	001c	3												
97900.0255	001c	4												
97900.0256	001c	5												

CATALOGUE No: 915.1.290.1F
ISSUED: 10 - 11